Produced By:

Commodore International Spare Parts GmbH
Braunschweig, West Germany

SYSTEM SCHEMATICS

A600

APRIL, 1992 **PN-400422-02**

INTERNATIONAL EDITION

COMMODORE "INTERNATIONAL EDITION" SERVICE MANUALS CONTAIN PART NUMBER INFORMATION WHICH MAY VARY ACCORDING TO COUNTRY. SOME PARTS MAY NOT BE AVAILABLE IN ALL COUNTRIES.

Commodore Business Machines, Inc.
1200 Wilson Drive, West Chester, Pennsylvania 19380 U.S.A.

Commodore makes no express or implied warranties with regard to the information contained herein. The information is made available solely on an as is basis, and the entire risk as to completeness, reliability, and accuracy is with the user. Commodore shall not be liable for any damages in connection with the use of the information contained herein. The listing of any available replacement part herein does not constitute in any case a recommendation, warranty or guaranty as to quality or suitability of such replacement part. Reproduction or use without express permission, of editorial or pictorial content, in any matter is prohibited.

This manual contains copyrighted and proprietary information. No part of this publication may be reproduced, stored in a retrieval system, or transmitted in any form or by any means, electronic, mechanical, photocopying, recording or otherwise, without the prior written permission of Commodore Electronics Limited.

Copyright © 1992 by Commodore Electronics Limited.
All rights reserved. Printed in U.S.A.

TABLE OF CONTENTS

SECTION 1 — SPECIFICATIONS

SPECIFICATIONS 1-1

SECTION 4 — PARTS

BOARD LAYOUT 4-1
SHIPPING ASSEMBLY 4-2
MAIN ASSEMBLY 4-3
SHIPPING ASSEMBLIES 4-4
MAJOR ASSEMBLIES 4-5
PCB COMPONENTS 4-6

SECTION 5 — SCHEMATICS

SCHEMATIC #315987, REV. C 5-1

SPECIFICATIONS

INTRODUCTION

The A600 is a feature enhanced version of the A500 personal computer, in a smaller case with no numeric keypad.

FEATURES

CPU:	7.16MHz 68000 NTSC 7.09 MHz 68000 PAL
MEMORY:	512KB or 1MB internal expandable with additional 1MB external (A601)
KICKSTART ROM:	512K (V2.XX)
MASS STORAGE MEMORY:	Internal, 3.5 inch FDD mounted on the right side. The A600 HD will contain a 2.5″ IDE HDD.
ADDITIONAL FEATURES:	PCMCIA/JEIDA Standard, Memory and I/O card interface. IDE Hard Drive Interface (2.5″ form factor) Color Composite Video output RF Audio/Video Output

NEW ADDITIONS

1) 8375 FAT AGNUS which supports 2 Meg. of Chip RAM
2) 8373 ECS Denise
3) Full ECS support
4) V2.XX in ROM
5) Memory and I/O card interface
6) IDE Hard Drive Interface (2.5″)
7) Color Composite Video Output
8) RF Video/Audio Output

CUSTOM CHIPS

The A600 custom chip set has been repackaged in PLCC form for surface mounting application. The A600 will use the 8375 2MB Fat Agnus, the 8373 ECS Denise and the 8364R7 Paula Chip which remains functionally unchanged. Lastly, the A600 will use an enhanced version of the 5719 Gary chip called Gayle, which supports the memory, I/O card interface and the IDE Hard Drive interface.

EXTERNAL SYSTEM I/O

External floppy, Serial, Parallel, Mouse, Joystick, Stereo Audio Ports — these Ports remain unchanged from their A500 counterparts.

PC CARD
PCMCIA SIGNAL DESCRIPTIONS

No.	Ver. 3	No.	Ver. 3
1	GND	35	GND
2	D3	36	$\overline{CD1}$
3	D4	37	D11
4	D5	38	D12
5	D6	39	D13
6	D7	40	D14
7	$\overline{CE1}$	41	D15
8	A10	42	$\overline{CE2}$
9	$\overline{OE}$	43	($\overline{RFSH}$)
10	A11	44	(OP1)
11	A9	45	(OP2)
12	A8	46	A17
13	A13	47	A18
14	A14	48	A19
15	$\overline{WE/PGM}$	49	A20
16	(RDY/$\overline{BSY}$)	50	A21
17	VCC	51	VCC
18	VPP1	52	VPP2
19	A16	53	A22
20	A15	54	A23
21	A12	55	RFU
22	A7	56	RFU
23	A6	57	RFU
24	A5	58	RFU
25	A4	59	RFU
26	A3	60	RFU
27	A2	61	($\overline{REG}$)
28	A1	62	OP3
29	A0	63	BVD1
30	D0	64	D8
31	D1	65	D9
32	D2	66	D10
33	WP	67	$\overline{CD2}$
34	GND	68	GND

IDE SIGNAL DESCRIPTIONS

Pin	Signal	Pin	Signal
1	−Host reset	2	Ground
3	+Host data 7	4	+Host data 8
5	+Host data 6	6	+Host data 9
7	+Host data 5	8	+Host data 10
9	+Host data 4	10	+Host data 11
11	+Host data 3	12	+Host data 12
13	+Host data 2	14	+Host data 13
15	+Host data 1	16	+Host data 14
17	+Host data 0	18	+Host data 15
19	Ground	20	Key
21	Reserved	22	Ground
23	−Host Low	24	Ground
25	−Host IOR	26	Ground
27	Reserved	28	+Host ALE
29	Reserved	30	Ground
31	+Host IRQ 14	32	−Host IO 16
33	+Host Addr 1	34	−Host PIAG
35	+Host Addr 0	36	+Host Addr 2
37	−Host CS 0	38	−Host CS 1
39	−Host SLV/ACT	40	Ground

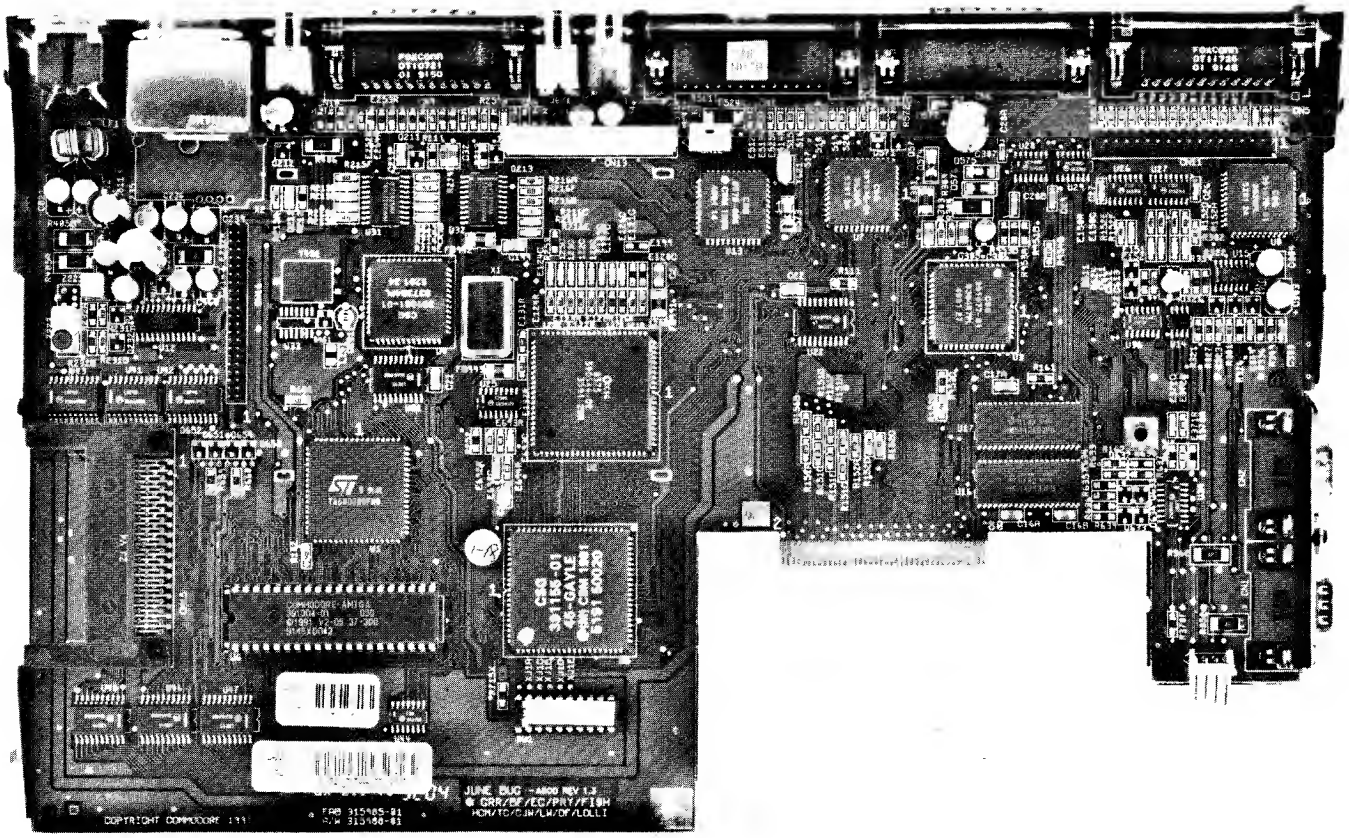

KEY COMPONENTS

Ref.	Chip	Description	Part Number
U1	68000	68000 Processor 8MHz	390084-01
U2	8375	ECS Agnus A300/A500+	390544-01
U3	8364	Paula	391077-01
U4	8373	ECS Denise	391081-01
U5	4145-20	Gayle Gate Array	391155-01
U6	ASST	ROM 256Kx16, 200ns	391304-01
U7-8	8520	Amiga VIA. 1 MHz	391078-01
U10-11	28F10	Flash Memory 128Kx8	
U12	CXA1145	Sony Video Encoder	391084-01
U13	6570-30	Amiga Keyboard MPU	391079-01
U14	NE555	Reset Timer	391104-01
U16-17	ASST	Dram 256Kx16, 120ns	391105-01
U15	LF347	Bimos Op-Amp	391103-01
	TL084	Bimos Op-Amp	391103-01
U28	1488	EIA Line Driver	391087-01
U29	1489	EIA Line Receiver	391086-01
X1	OSC	TTL 28.63636 MHz NTSC	325566-14
	OSC	TTL 28.37512 MHz PAL	252344-01
Y451	XTAL	4.43619 MHz PAL Burst	252345-01
Y621	XTAL	3 MHz Ceramic Resonator	391156-01
X2	ASST	PAL Video Modulator	313371-05
	ASST	NTSC Video Modulator	313371-01

CONNECTORS

Ref.	Type	Description	Part Number
CN1	DB9P	Mouse/Joystick 1	390242-01
CN2	DB9P	Mouse/Joystick 2	390242-01
CN3	RCA-J	Right Audio Output	252122-02
CN4	RCA-J	Left Audio Output	252122-01
CN5	DB23S	External Floppy	390241-03
CN6	DB25P	RS232 Serial Port	
CN7	DB25S	Parallel Printer Port	390241-05
CN8	SQ DIN	Power Supply Connector	252167-01
CN9	DB23P	Video Output	390242-03
CN10	RCA-J	Composite Video	252122-01
CN11	DIL-34	Internal Floppy Signal	903345-17
CN12	SIL-4	Internal Floppy Power	325516-04
CN13	MEM-30	Keyboard Membrane	390492-02
CN14	SIL-4	Internal Floppy Power	
CN13	MEM-30	Keyboard Membrane	
CN14	SIL-4	Keyboard Status LED's	391314-01
CN15	PCMCIA	PC "Memory Card"	391073-01
P9	EDGE-80	Memory Bus Expansion	

Shipping Assembly

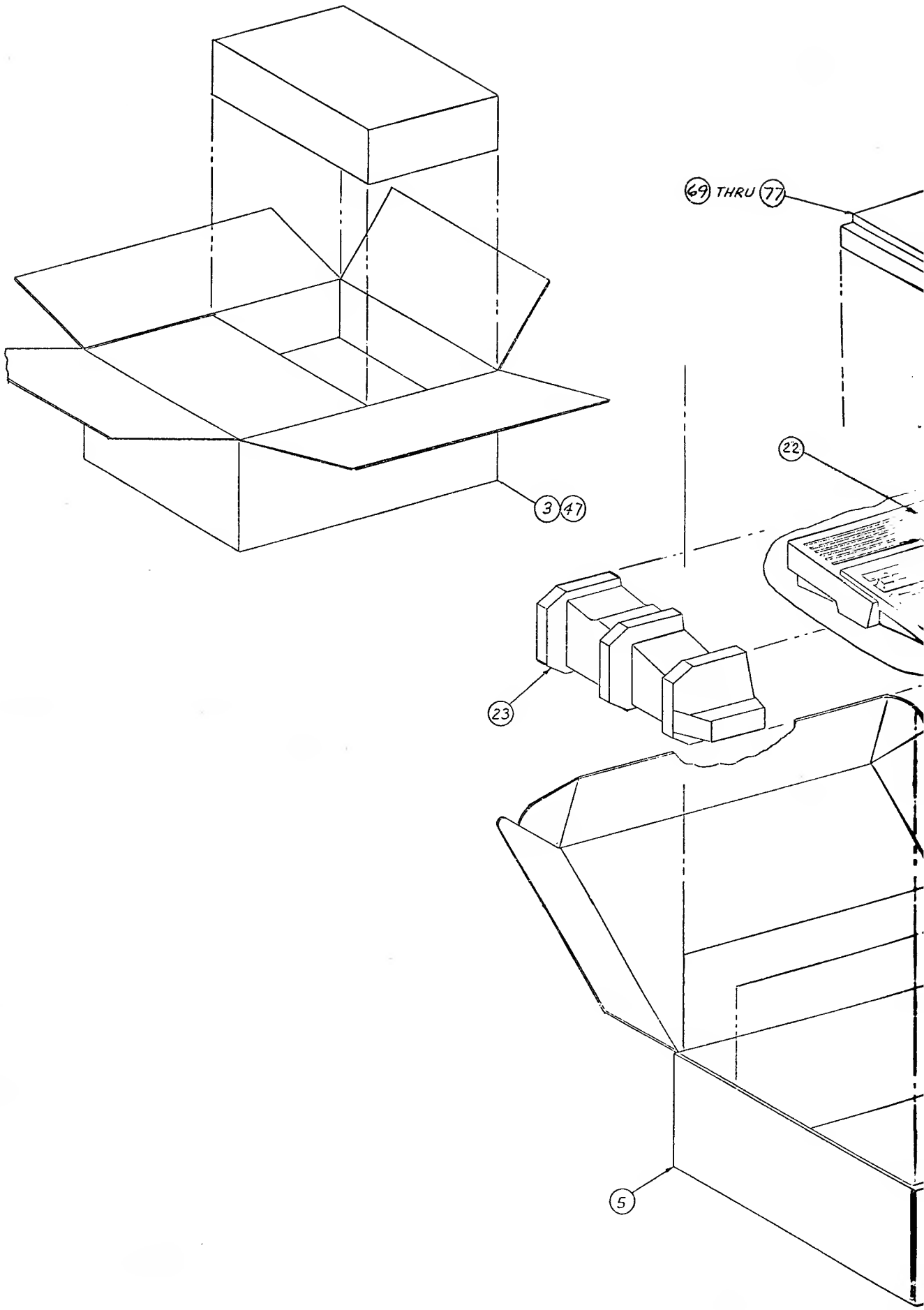

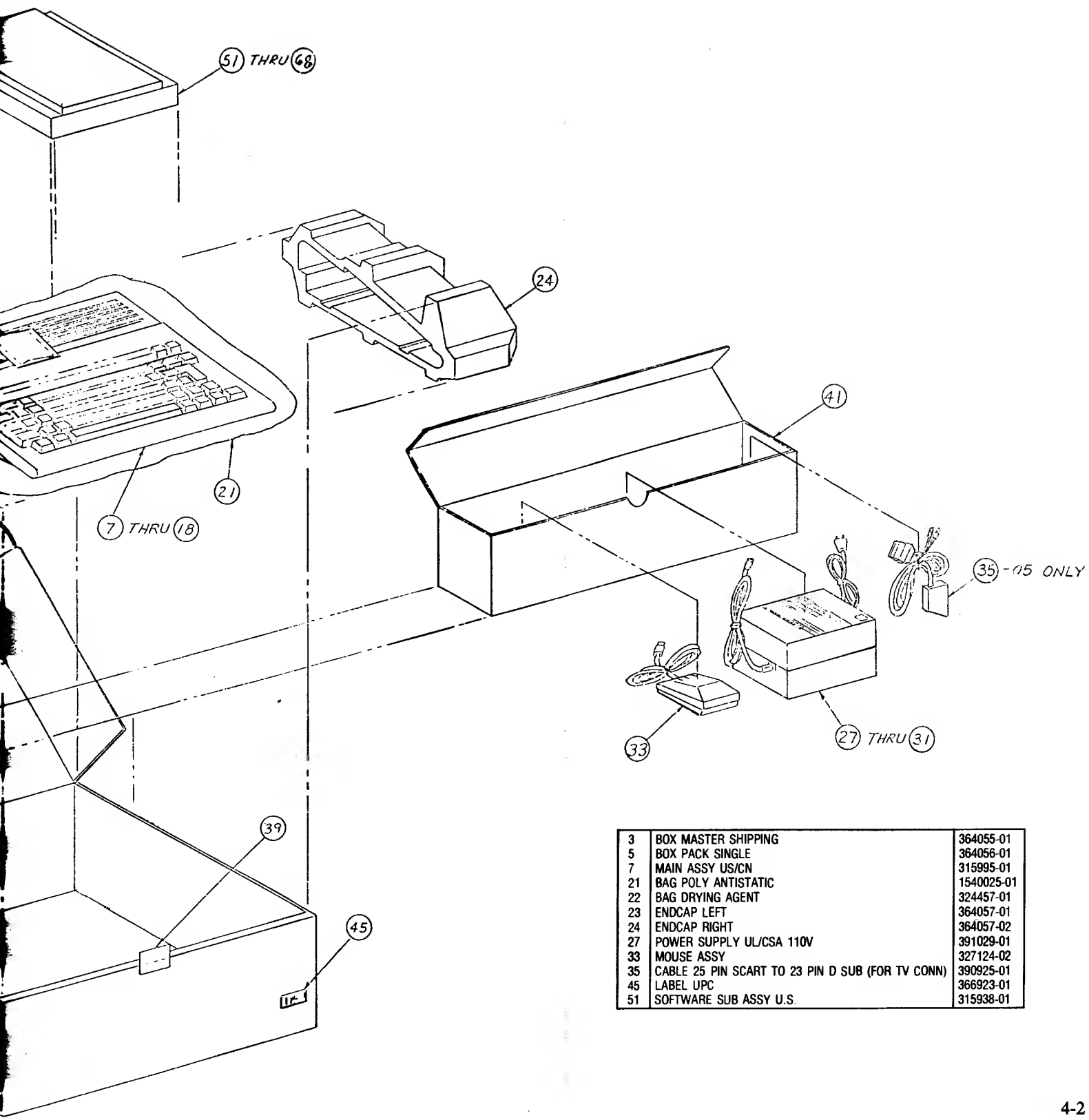

3	BOX MASTER SHIPPING	364055-01
5	BOX PACK SINGLE	364056-01
7	MAIN ASSY US/CN	315995-01
21	BAG POLY ANTISTATIC	1540025-01
22	BAG DRYING AGENT	324457-01
23	ENDCAP LEFT	364057-01
24	ENDCAP RIGHT	364057-02
27	POWER SUPPLY UL/CSA 110V	391029-01
33	MOUSE ASSY	327124-02
35	CABLE 25 PIN SCART TO 23 PIN D SUB (FOR TV CONN)	390925-01
45	LABEL UPC	366923-01
51	SOFTWARE SUB ASSY U.S.	315938-01

Main Assembly

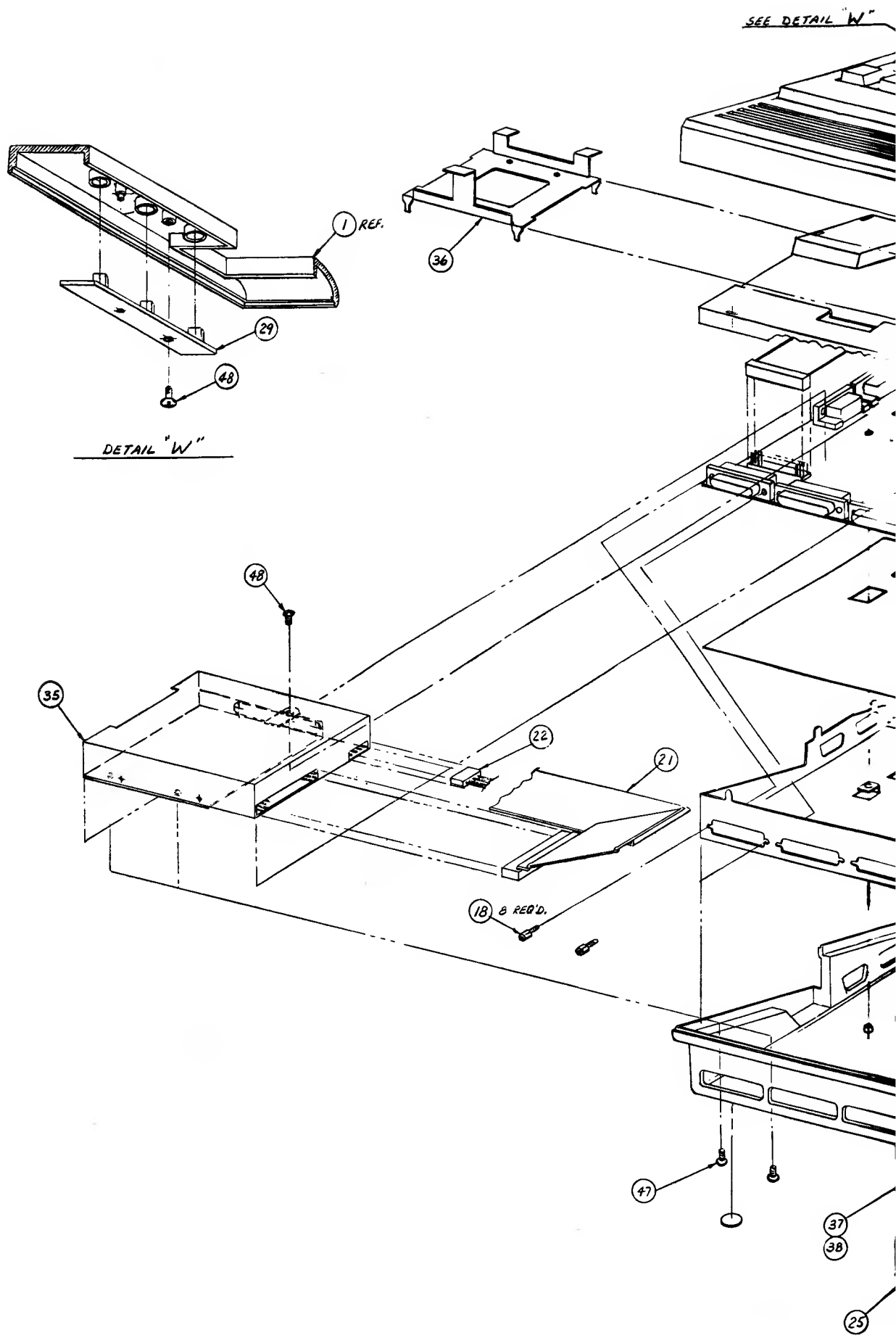

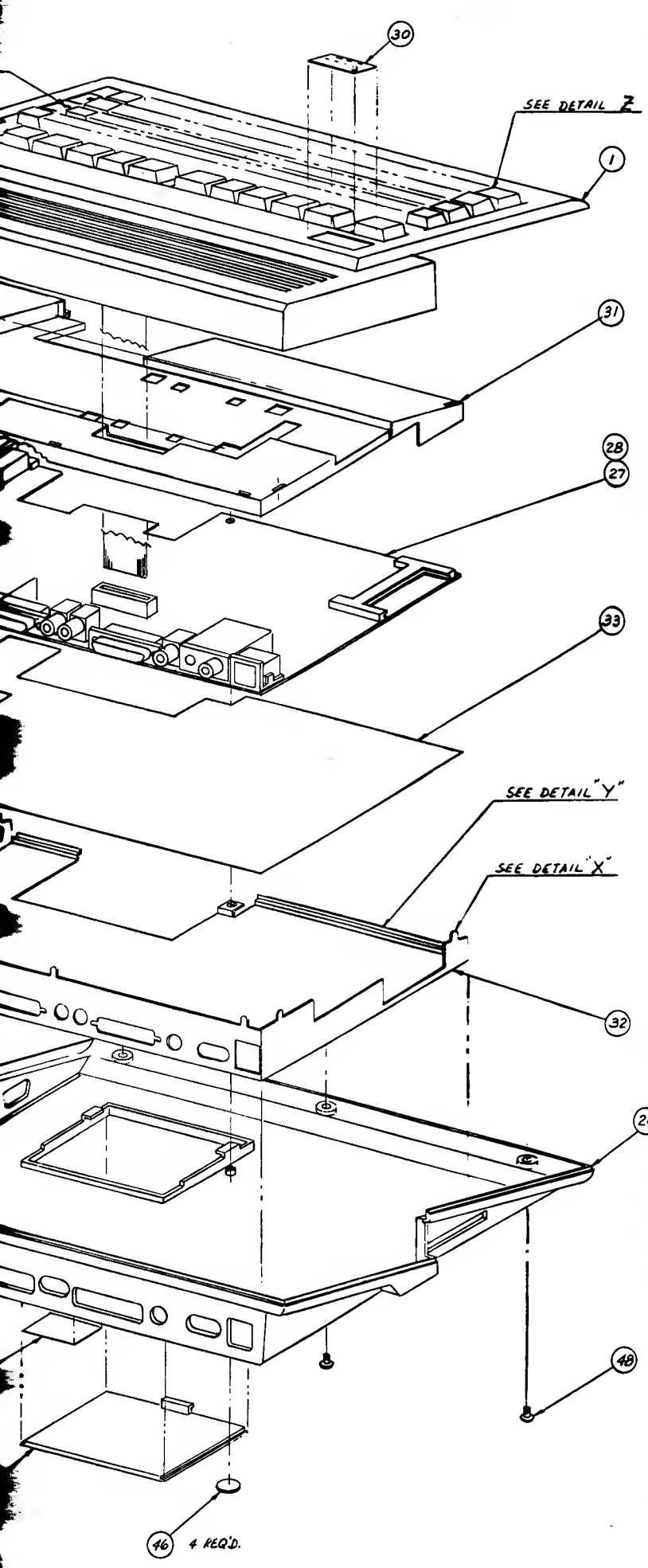

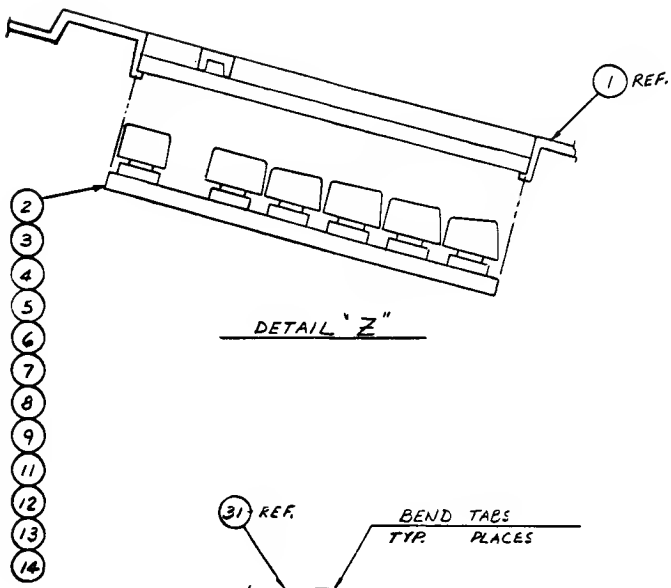

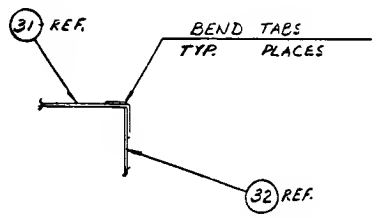

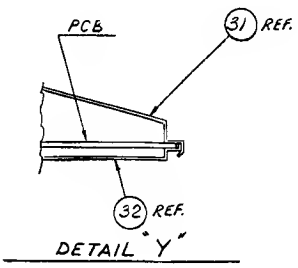

1	TOP CASE	363786-01
18	JACKPOST STANDOFF (QTY 8)	390251-01
21	CABLE ASSY FLOPPY DISK DRIVE	364423-01
22	HARNESS DISK POWER ASSY	327207-02
24	BOTTOM CASE	363787-01
25	RAM DDDR	363899-01
27	PCB ASSY NTSC	315986-01
28	PCB ASSY PAL	315986-02
29	LED ASSY	315992-01
30	NAMEPLATE A600	363951-01
31	TOP SHIELD	363788-01
32	BOTTOM SHIELD	363789-01
33	INSULATION SHEET	363790-01
34	BRACKET SUPPORT FDD	363795-01
35	DRIVE FLOPPY DISK 3.5"	363914-01
36	SUPPORT HARD DISK DRIVE	363969-01
37	LABEL RATING & SERIAL PAL	366800-01
38	LABEL RATING & SERIAL NTSC	366800-02
46	FEET RUBBER WHITE (QTY 4)	950150-01
47	SCREW 3M X 6.0MM MACH PHL PH (QTY 4) FASTEN FDD TO BOTTOM CASE	906800-05

Commodore International Spare Parts List
SHIPPING ASSEMBLIES

Commodore part numbers are provided for reference only and do not indicate the availability of spare parts from Commodore. Industry standard parts (Resistors, Capacitors, Connectors) should be secured locally. Part number information may vary according to country, some parts may not be available in all countries. Part Numbers are subject to change.

A600 SHIPPING ASSY	
530300-01	U.S.
530300-02	CN
530300-03	U.K.
530300-04	GR
530300-05	FR
530300-06	IT
530300-07	SP
530300-0B	SG
530300-09	SF
530300-10	AU NOT USED
530300-11	NR
530300-12	SO
530300-13	FN
530300-14	NE
530300-15	DN
530300-16	BF
530300-17	BD
530300-1B	AL
530300-19	CEL
530300-20	PG
364055-01	BOX MASTER SHIPPING
364056-01	BOX PACK SINGLE
315995-01	MAIN ASSY US/CN
315995-02	MAIN ASSY GR/AU
315995-03	MAIN ASSY FR/BE
315995-04	MAIN ASSY SO/FN
315995-05	MAIN ASSY SP
315995-06	MAIN ASSY ON
315995-07	MAIN ASSY SEV
315995-08	MAIN ASSY NR
315995-09	MAIN ASSY NE
315995-10	MAIN ASSY UK/AL
315995-11	MAIN ASSY IT
315995-12	MAIN ASSY PG
1540025-01	BAG POLY ANTISTATIC
324457-01	BAG DRYING AGENT
364057-01	ENOCAP LEFT
364057-02	ENDCAP RIGHT
391029-01	POWER SUPPLY UL/CSA 110V

A600 SHIPPING ASSY *(Continued)*	
391029-02	POWER SUPPLY BSI 240V
391029-03	POWER SUPPLY VOE 220V
391029-04	POWER SUPPLY SEV 220V
391029-05	POWER SUPPLY SAA 220V
327124-02	MOUSE ASSY
390925-01	CABLE 25 PIN SCART TO 23 PIN O SUB (FOR TV CONN)
364346-01	BOX ACCESSORY
364342-01	SPACER CARDBOARO
364342-02	SPACER CARDBOARD
318143-02	GLUE WHITE
366923-01	LABEL UPC
36B0B4-01	SEAL TAMPER EVIDENT (2 ON SINGLE PACK BOX FLAPS)
999104-01	TAPE ADHESIVE TRANSPARENT 50MM
31593B-01	SOFTWARE SUB ASSY U.S.
31593B-02	SOFTWARE SUB ASSY CN
31593B-03	SOFTWARE SUB ASSY UK
31593B-04	SOFTWARE SUB ASSY GR
31593B-05	SOFTWARE SUB ASSY FR
31593B-06	SOFTWARE SUB ASSY IT
315938-07	SOFTWARE SUB ASSY SP
315938-08	SOFTWARE SUB ASSY SG
315938-09	SOFTWARE SUB ASSY SF
31593B-10	SOFTWARE SUB ASSY NR
315938-11	SOFTWARE SUB ASSY SD
31593B-12	SOFTWARE SUB ASSY FN
31593B-13	SOFTWARE SUB ASSY NE
31593B-14	SOFTWARE SUB ASSY ON
315938-15	SOFTWARE SUB ASSY BF
315938-16	SOFTWARE SUB ASSY AL
368435-01	MANUAL INTRODUCING THE A600 ENGLISH
368436-01	MANUAL INTROOUCING THE A600 GERMAN
368437-01	MANUAL INTRODUCING THE A600 FRENCH
368438-01	MANUAL INTRODUCING THE A600 ITALIAN
368439-01	MANUAL INTRODUCING THE A600 SPANISH
368440-01	MANUAL INTROOUCING THE A600 NORWEGIAN
368441-01	MANUAL INTROOUCING THE A600 SWEDISH
368443-01	MANUAL INTROOUCING THE A600 DUTCH
368444-01	MANUAL INTROOUCING THE A600 OANISH

Commodore International Spare Parts List
A600 MAJOR ASSEMBLIES

Commodore part numbers are provided for reference only and do not indicate the availability of spare parts from Commodore. Industry standard parts (Resistors, Capacitors, Connectors) should be secured locally. Part number information may vary according to country, some parts may not be available in all countries.

315995-01	MAIN ASSY US/CN
315995-02	MAIN ASSY GR/AU
315995-03	MAIN ASSY FR/BE
315995-04	MAIN ASSY SO/FN
315995-05	MAIN ASSY SP
315995-06	MAIN ASSY ON
315995-07	MAIN ASSY SEV
315995-08	MAIN ASSY NR
315995-09	MAIN ASSY NE
315995-10	MAIN ASSY UK/AL
315995-11	MAIN ASSY IT
315995-12	MAIN ASSY PG
363786-01	TOP CASE
363756-01	KEYBOARO ASSY US/CN
363756-04	KEYBOARO ASSY GERMAN
363756-05	KEYBOARO ASSY FRENCH
363756-12	KEYBOARO ASSY SWEOISH/FINNISH
363756-07	KEYBOARO ASSY FINNISH
363756-15	KEYBOARO ASSY OANISH
363756-08	KEYBOARO ASSY SWISS
363756-11	KEYBOARO ASSY NORWEGIAN
363756-03	KEYBOARO ASSY UK/AUSTRALIA
363756-06	KEYBOARO ASSY ITALIAN
363756-20	KEYBOARO ASSY PORTUGUESE
363756-99	KEYBOARO ASSY BLANK
390251-01	JACKPOST STANOOFF (QTY B)
390251-03	JACKPOST STANOOFF (SUB FOR 390251-01)
324530-02	JACKPOST STANOOFF (SUB FOR 390251-01)
3637B7-01	BOTTOM CASE
363899-01	RAM OOOR
364423-01	CABLE ASSY FLOPPY OISK ORIVE
327207-02	HARNESS OISK POWER ASSY
315986-01	PCB ASSY NTSC
315986-02	PCB ASSY PAL
3159B6-03	PCB NTSC 1M
315992-01	LEO ASSY
363951-01	NAMEPLATE A600
3637BB-01	TOP SHIELO
363789-01	BOTTOM SHIELO
363790-01	INSULATION SHEET
363795-01	BRACKET SUPPORT FOO
363914-01	ORIVE FLOPPY OISK 3.5"
363969-01	SUPPORT HARO OISK ORIVE
366800-01	LABEL RATING & SERIAL PAL
366800-02	LABEL RATING & SERIAL NTSC
366800-03	LABEL RATING & SERIAL PAL (SUBSTITUTE)
366800-04	LABEL RATING & SERIAL NTSC (SUB)
366B00-05	LABEL RATING & SERIAL PAL (SUB)
366800-06	LABEL RATING & SERIAL NTSC (SUB)
366800-07	LABEL RATING & SERIAL PAL (SUB)
366800-08	LABEL RATING & SERIAL NTSC (SUB)
950150-01	FEET RUBBER WHITE (QTY 4)
906800-05	SCREW 3M X 6.0MM MACH PHL PH (QTY 4) FASTEN FOO TO BOTTOM CASE
906883-01	SCREW 3M X 6.0MM SELF TAPPING (QTY 4) FASTEN PCB, FOO BKT TO BOTTOM CASE
364075-01	SCHEMATIC
391033-02	LEO GREEN
391033-01	LEO YELLOW
391315-01	CONNECTOR HOUSING 4 POSITION
391316-01	PIN
903756-10	WIRE AWG #24 BLACK 200MM LG.
903756-02	WIRE AWG #24 REO 200MM LG.
903756-03	WIRE AWG #24 ORANGE 200MM LG.
903756-05	WIRE AWG #24 GREEN 200MM LG.

A601 RAM EXPANSION

580300-01	512K	580300-02	1M

HARD DRIVE ACCESSORIES

368681-01	INTRO MANUAL	906600-01	SCREW (QTY 4)
368712-01	MANUAL USERS	367B26-01	OISK INSTALL 204
312896-01	HOO ASSY	363951-02	NAMEPLATE A600HO
364435-01	CABLE HOO		

Commodore International Spare Parts List
PCB Components
PCB Assembly A600

Commodore part numbers are provided for reference only and do not indicate the availability of spare parts from Commodore. Industry standard parts (Resistors, Capacitors, Connectors) should be secured locally. Part number information may vary according to country, some parts may not be available in all countries.

IC COMPONENTS		
390084-01	CPU MC68000FN8 8MHZ 68PIN PLCC	U1
390544-02	8375R0 AGNUS HR NTSC 84 PIN PLCC	U2
390544-01	8375R0 AGNUS HR PAL 84PIN PLCC	U2
391155-01	4145R0F020 GAYLE 84PIN PLCC	U5
391081-01	8375R4 DENISE HR 52PIN PLCC	U4
391077-01	8364R7 PAULA 52PIN PLCC	U3
391079-01	6571R4 KEYBD UP 44PIN PLCC	U13
391078-01	8520R4 CIA 44PIN PLCC 1MHZ	U7,U8
391144-01	74HCT244 SM	U31,U32
391139-01	74F00 SM	U26
391140-01	74F27 SM	U36
391141-01	74LS74A SM PAL	U33
391218-01	74F02 SM	U44
391142-01	74LS245 SM	U21,U22,U41-U43,U45-U47
391085-01	74LS157 SM	U34
391176-01	74F139 SM	U27
391099-01	74F258 SM	U25
390071-03	PAL 16L8B BLANK (WILL BE USED ONLY TEMPORARILY W/REV 0 GAYLE)	
391087-01	INTERFACE MC1488D SM	U28
391086-01	INTERFACE MC1489D SM	U29
391103-01	LINEAR LF347/TL084ACD SM	U15
391104-01	LINEAR NE555 SM	U14
391105-01	DRAM 256K X 16 80NS SM	U16,U17
391304-01	ROM KICKSTART V2.0 40PIN DIP	U6
391084-01	VIDEO ENCODER CXA1145M SM	U12
CONNECTORS		
390241-03	D SUB 23 PIN FEMALE DB23S	CN5 EXTERNAL FLOPPY
390242-03	D SUB 23 PIN MALE DB23P	CN9 RGB VIDEO
390241-05	D SUB 25 PIN FEMALE DB25S	CN7 PARALLEL PRINTER PORT
390242-01	D SUB 9 PIN MALE DB9P	CN1,CN2,MOUSE/JOY-STICK
252122-01	RCA JACK YELLOW	CN10,COLOR COM-POSITE VIDEO
252122-01	RCA JACK WHITE	CN4 LEFT AUDIO
252122-02	RCA JACK BLACK	CN3 RIGHT AUDIO
252167-01	DIN 5 PIN SQUARE	CN8 CPU POWER
325516-04	SIL 4PIN HEADER	CN12,FLOPPY POWER/LED
903345-17	DIL 34PIN HEADER W/KEY (PIN3)	CN11 FLOPPY SIGNAL
391153-01	DIL 44PIN HEADER W/KEY (PIN20)	CN16 HDD
391073-01	68 PIN RIGHT ANGLE HIGH DENSITY	CN15 CREDIT CARD
390492-02	30 PIN LOCKING ZIF FFC	CN13 KEYBOARD
391314-01	HEADER RT ANGLE 4 PIN POLARIZED	CN14 LED
TRANSISTORS AND DIODES		
391145-01	TRANS JFET MPF102/PN4302 SOT23	Q321,Q331
391121-01	TRANS NPN 2N3904 SOT23	Q211-Q213,Q231-Q233, Q511,Q571,Q621,Q622, Q651,Q653,(Q461 PAL)
391122-01	TRANS PNP 2N3906 SOT23	Q341,Q631-Q633,Q652, Q654
391129-01	DIODE 1N4148 SOT23	D571
391128-01	DIODE 1N914 SDT23 (SUB FOR 391129-01)	D571
391327-01	DIODE 1N4001 MELF	D572-D576
RESISTORS — 1/8W 5% UNLESS OTHERWISE SPECIFIED		
310026-26	SM 0 OHM (1206) NTSC JUMPERS	E321R,E331R,R202, R225,(R624-R626 NOT STUFFED)
310026-26	SM 0 OHM (1206) PAL JUMPERS	E321R,E331R,R203 (R624-R626 NOT STUFFED)
310026-10	SM 27 OHM (1206)	R113,R114,R152B-R152H,E112R,E120R-E129R,E150R
310026-01	SM 47 OHM (1206)	E253R-E256R,E577R, E561R,E562R,E524R

RESISTORS — 1/8W 5% UNLESS OTHERWISE SPECIFIED *(Continued)*		
310026-12	SM 68 OHM (1206)	E131R,E132R,E251R, E252R,E257R,E261R, E262R,E266R,E267R, E351R,E353R-E358R, E361R,E363R-E368R, E371R-E374R,E511R-E523R,E525R,E551R-E556R,E558R,E581R-E596R,E692R-E694R, R151A-R151H,R152A
310026-29	SM 75 OHM (1206)	R232E,R234A-R234D
310026-05	SM 100 OHM (1206)	R237,R622,R639
310026-24	SM 120 OHM (1206)	R236,R714A,R714B
310026-13	SM 150 OHM (1206)	R211-R213,R233A-R233C
310026-40	SM 270 OHM (1206)	R214A,R215A,R216A
310022-22	SM 330 OHM (1206)	R214F,R215F,R216F
310026-14	SM 360 OHM (1206)	R235,R321,R331
310026-15	SM 390 OHM (1206)	R325,R335
310026-21	SM 470 OHM (1206)	R111,R161,R162,R515, R659,R660,R952,R953A-R953C
310026-11	SM 820 OHM (1206)	R224
310026-07	SM 1K OHM (1206)	R101,R102,R222,R223, R303,R304,R319,R324, R334,R511D,R103,R512, R621,R654,R954A, R954B,R231A-R231C, R238,R214B,R215B, R216B (R244)
310026-25	SM 1.5K (1206)	R221
310026-32	SM 2K OHM (1206)	R214C,R215C,R216C
310026-16	SM 2.7K OHM (1206)	R347,R571
310026-08	SM 4.7K OHM (1206)	R251-R253,R348,R632, R634,R636,R655,R951A-951F,R370A-370H,R651, R719,R514,R715X (R241)
310026-17	SM 10K OHM (1206)	R322,R323,R327,R329, R332,R333,R337,R339, R346,R511A-R511C, R511F,RR511I,R637, R572,R623,R631,R633, R635,R652,R653,R656, R657,R715A-R715H, R716-R718 (R243)
310026-23	SM 22K OHM (1206)	R345
310026-27	SM 27K OHM (1206)	R459
310026-18	SM 33K OHM (1206)	R232A-R232C,R349
310026-03	SM 47K OHM (1206)	R612
310026-19	SM 470K OHM (1206)	R326,R336
310026-20	SM 1M OHM (1206)	R611
310026-09	SM 10 OHM (1206)	R301,R302
310026-35	SM 6.8K OHM (1206)	(R242 FOR PAL)
310026-41	CHIP SM 1.8K (1206)	(R245 FOR PAL) R246 NTSC
310026-42	CHIP SM 180 OHM (1206)	(R236 FOR PAL)
391154-01	SM 4.02K OHM (1206) 1/8W 1%	R214D,R215D,R216D
391154-02	SM 8.06K OHM (1206) 1/8W 1%	R214E,R215E,R216E
391154-03	SM 1K (1206) 1/8W 1%	R214B,R215B,R216B
391154-04	SM 2K (1206) 1/8W 1%	R214C,R215C,R216C
391093-01	SM 1 OHM (2512) 1W 5%	R309,R405A,R405B
391093-02	SM 4.7 OHM (2512) 1W 5%	E232R,R352,R362,R406
391093-04	SM 47 OHM (2512) 1W 5%	E524R
CAPACITORS		
390818-03	SM NPO 15PF (1206)	(C242 PAL)
390818-04	SM NPO 47PF (1206)	E258C-E260C,E-692C, E693C,E150C,E151-E154, E694C
390818-05	SM NPO 56PF (1206)	C245, (C241 PAL)

Commodore International Spare Parts List
PCB Components *(Continued)*
PCB Assembly A600

CAPACITORS *(Continued)*		
390818-06	SM NPO 100PF (1206)	E231C,E251C-E257C, E261C,E262C,E266C, E267C,E511C-E523BC, E525C,E551C,E552C, E558C,E581C-E596C
390853-06	SM X7R 470PF (1206)	E351C,E353C,E354C, E361C,E363C,E364C, E371C-E374C,E553C-E556C
390853-07	SM X7R 1000PF (1206)	(C243 PAL)
390853-08	SM X7R 3900PF (1206)	C323,C333
390853-09	SM X7R 6800PF (1206)	E321C,E331C,C322,C332, E355C-E358C,E365C-E368C
390853-01	SM X7R .01UF (1206)	C246,C26,C27,C28A, C28B,C29,C33,C34,C36, C349,E597C,E598C,C591, C613,C800-C803,E232C, E263C-E265C,E524C, E557C,E561C,E562C, C592,C7,C8, (C244 PAL)
390853-04	SM X7R .047UF (1206)	C311-C314,C352
310027-02	SM Z5U .1UF (1206)	C221,C222,C362,C611, (C321,C331,NOT STUFFED)
390797-01	SM Z5U .33UF (1210)	C12A,C12B,C13,C14, C16A,C16B,C17A,C17B, C1A,C1B,C2-C4,C21, C211-C213,C22,C25, C301,C302,C305,C31, C41-C43,C32,C551,C552, C5A,C5B,C6,C701,C702, C711,C804,C199,C44-C47

CAPACITORS *(Continued)*		
390818-01	SM NPO 22PF (1206)	E112C,E122C-E129C, C621,C622
391097-07	ALUM ELECT 10UF 25V SM (C)	C214,C306,C460,C612
391097-08	ALUM ELECT 22UF 25V SM (D)	C303,C304,C324,C334, C459
391097-04	ALUM ELECT 47UF 16V SM (D)	C821,C822
391097-01	ALUM ELECT 100UF .63V SM (D)	C235,C236,C239,C409
390101-10	ALUM ELECT 1000UF 10V	C408,C811
390101-03	ALUM ELECT 470UF 16V	C237,C307
MISCELLANEOUS		
391092-01	FILTER CHIP FERRITE BEAD LARGE (1812)	E301,FB991-FB993
391092-01	FILTER CHIP FERRITE BEAD MEDIUM (1206)	E231R,E258R-E260R, E263R-E265R,E597R, E598R
251878-02	LINE FILTER	LF 1
391146-02	BANDPASS FILTER NTSC (F-K5-MS)	Z221
391147-02	DELAY LINE NTSC (F K5 MD)	Z222
391146-01	BANDPASS FILTER PAL (BPF K5 MS)	Z221
391147-01	DELAY LINE PAL (F KS MT)	Z222
391138-01	INDUCTOR SM 1.2UH (1206)	(L241)
391156-01	RESONATOR CERAMIC 3.00 MHZ	Y621
252345-01	XTAL 4.433619 MHZ	(Y451)
325566-14	OSCILLATOR 28.63636 MHZ NTSC	X1
252344-01	OSCILLATOR 28.37516 MHZ PAL	(X1)
904150-09	SOCKET 42 PIN DIP	U6
313371-01	MODULATOR MDG VA3424 NTSC	X2
313371-05	MODULATOR MDG UD 3626 PAL	(X2)
366648-01	LABEL BAR CODE BLANK 0.5″ X 1.75″	
366649-01	LABEL BAR CODE BLANK 0.5″ X 1.00″	

Schematic #315987, Rev. C
Sheet 10 of 13

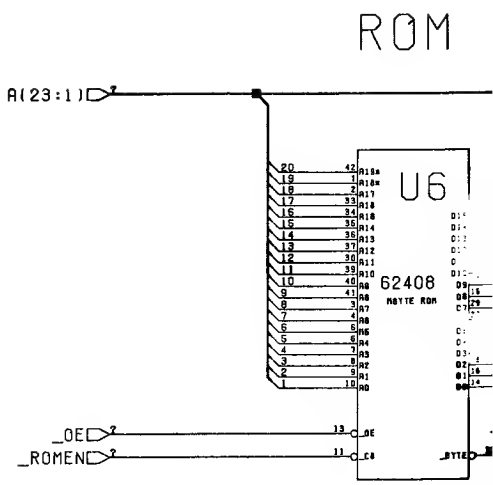

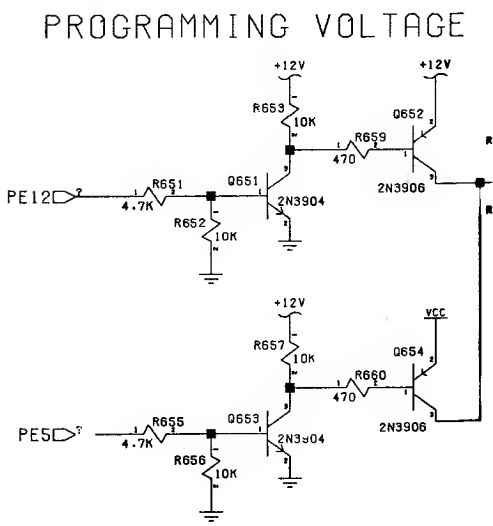

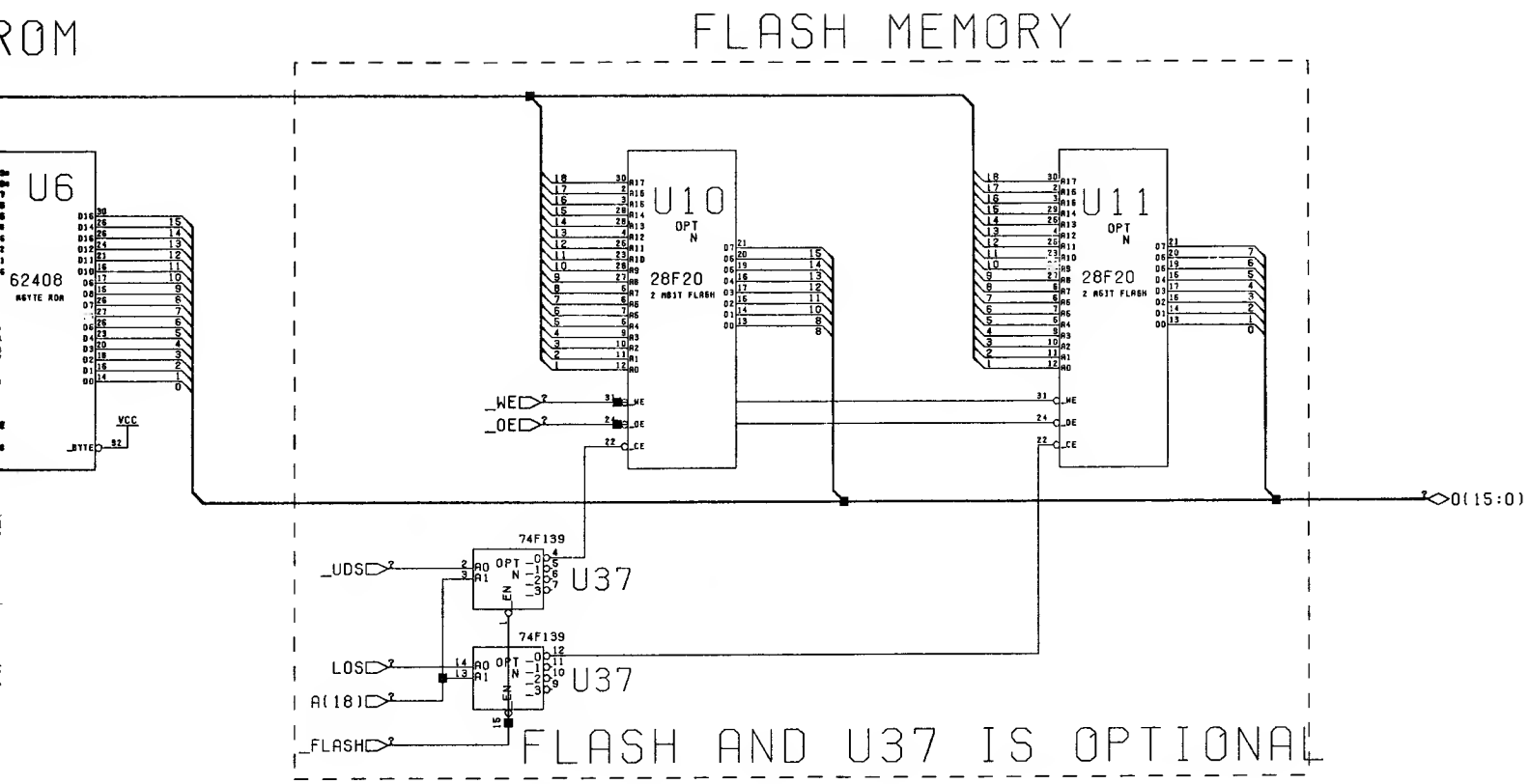
ROM
FLASH MEMORY
U6
62408
U10
OPT
N
28F20
2 MBIT FLASH
U11
OPT
N
28F20
2 MBIT FLASH
_WE
_OE
VCC
_BYTE
D(15:0)
74F139
U37
_UDS
LOS
A(18)
_FLASH
FLASH AND U37 IS OPTIONAL

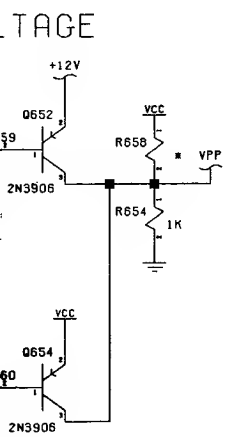
TAGE
+12V
Q652
R658
VPP
2N3906
R654
1K
Q654
2N3906

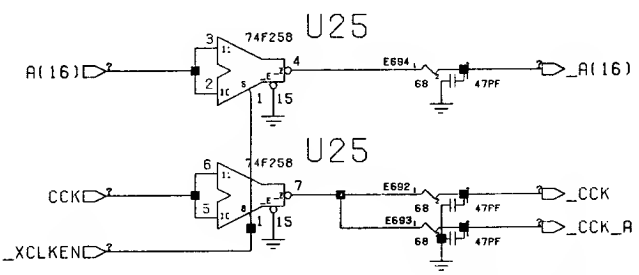
U25
74F258
A(16)
_A(16)
E694
68
47PF
U25
74F258
CCK
_XCLKEN
_CCK
_CCK_A
E692
E693
FUNNY INVERTERS

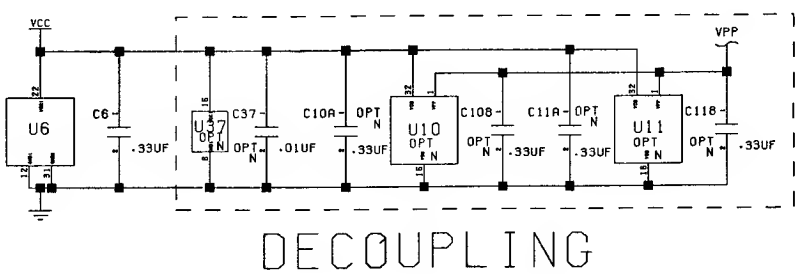
VCC
VPP
U6
C6
.33UF
U37
OPT
N
C37
.01UF
C10A
.33UF
U10
OPT
N
C10B
.33UF
C11A
.33UF
U11
OPT
N
C11B
.33UF
DECOUPLING

Schematic #315987, Rev. C
Sheet 11 of 13

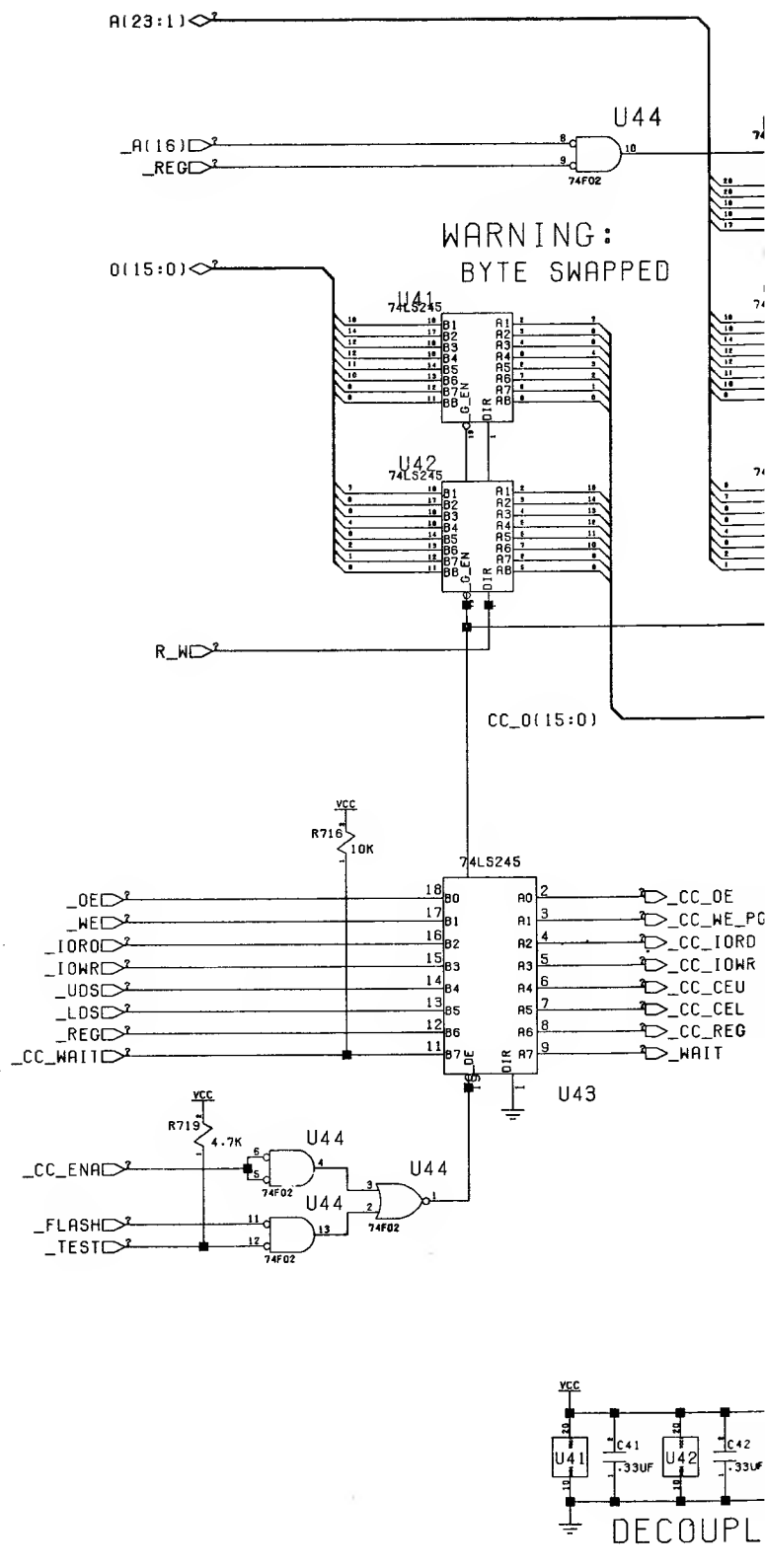

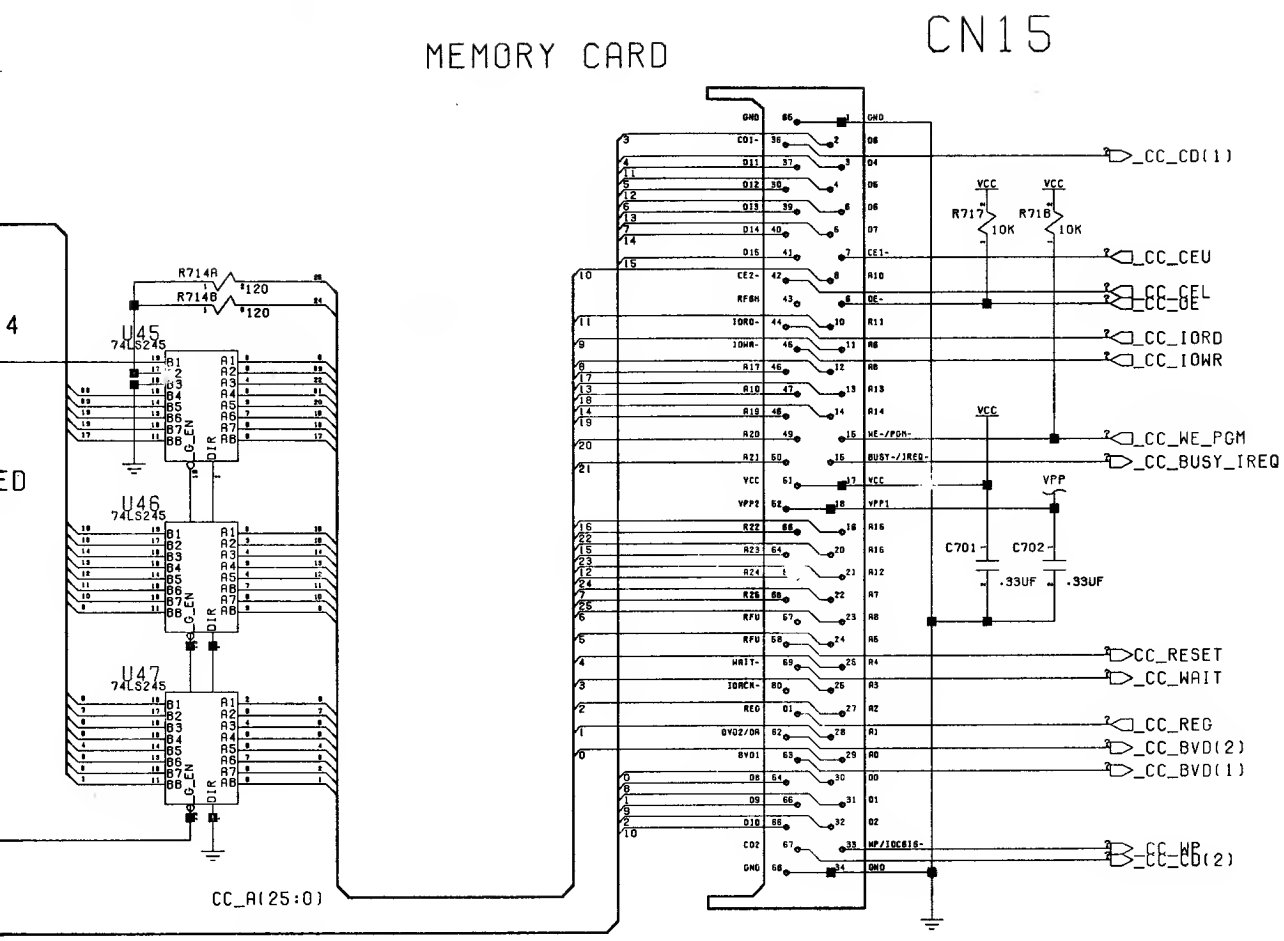
MEMORY CARD
CN15
R714A
120
R714B
120
U45
74LS245
U46
74LS245
U47
74LS245
G_EN
DIR
CC_A(25:0)
R717
10K
R718
10K
VCC
VPP
C701
.33UF
C702
.33UF
_CC_CD(1)
_CC_CEU
_CC_CEL
_CC_OE
_CC_IORD
_CC_IOWR
_CC_WE_PGM
_CC_BUSY_IREQ
_CC_RESET
_CC_WAIT
_CC_REG
_CC_BVD(2)
_CC_BVD(1)
_CC_WP
_CC_CD(2)

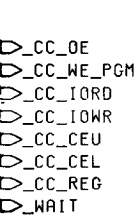
_CC_OE
_CC_WE_PGM
_CC_IORD
_CC_IOWR
_CC_CEU
_CC_CEL
_CC_REG
_WAIT

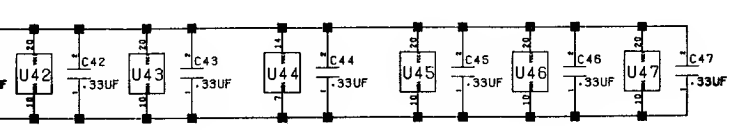
U42
C42
.33UF
U43
C43
.33UF
U44
C44
.33UF
U45
C45
.33UF
U46
C46
.33UF
U47
C47
.33UF
ECOUPLING

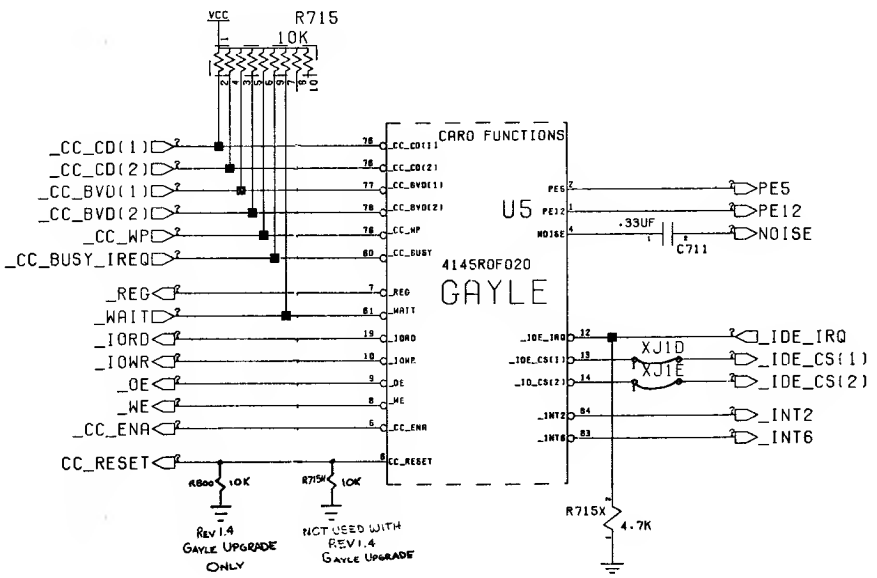
VCC
R715
10K
CARD FUNCTIONS
_CC_CD(1)
_CC_CD(2)
_CC_BVD(1)
_CC_BVD(2)
_CC_WP
_CC_BUSY_IREQ
_REG
_WAIT
_IORD
_IOWR
_OE
_WE
_CC_ENA
CC_RESET
U5
4145ROF020
GAYLE
PE5
PE12
NOISE
.33UF
C711
XJ1D
XJ1E
_IDE_IRQ
_IDE_CS(1)
_IDE_CS(2)
_INT2
_INT6
R715X
4.7K
REV 1.4 GAYLE UPGRADE ONLY
NOT USED WITH REV 1.4 GAYLE UPGRADE

Schematic #315987, Rev. C
Sheet 12 of 13

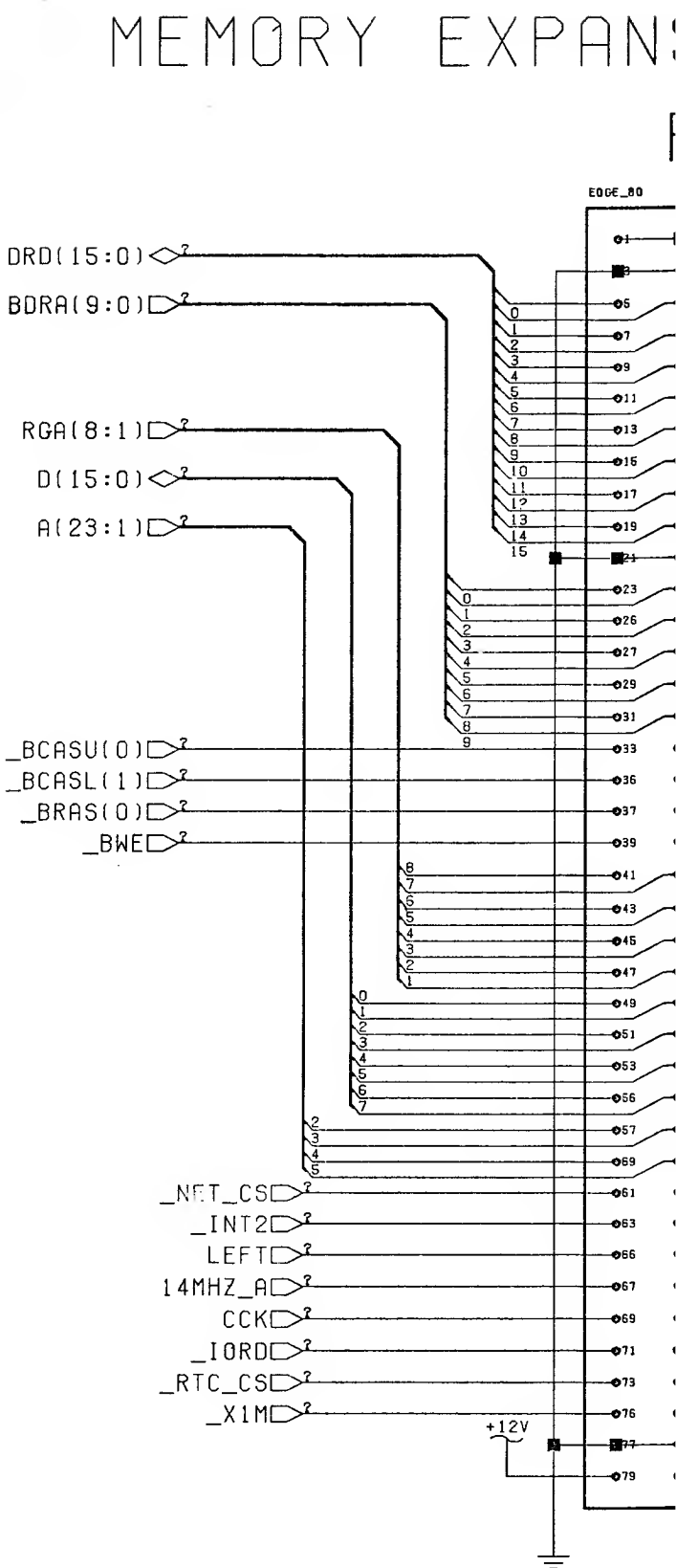

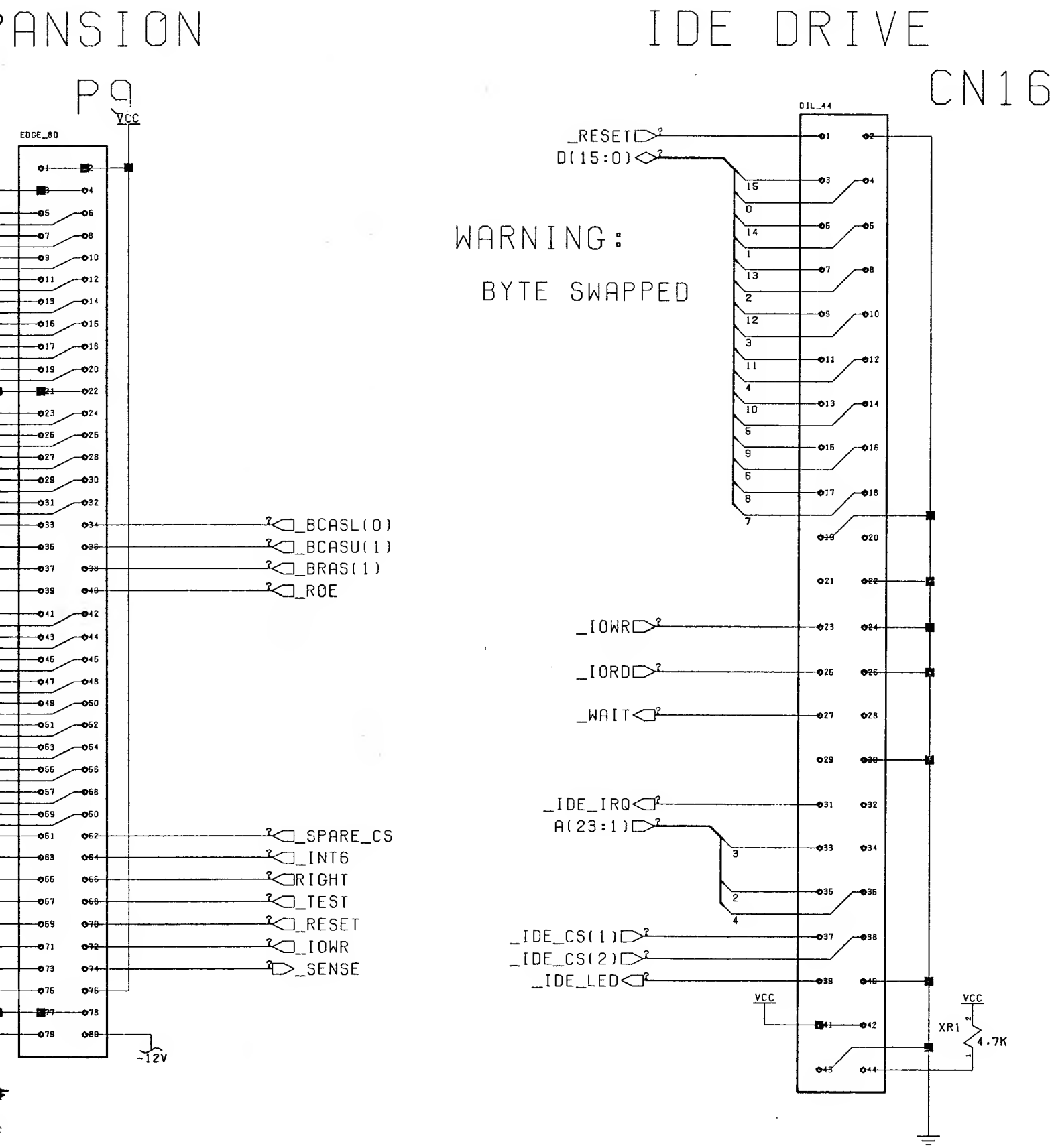
PANSION
P9
VCC
EDGE_80
_BCASL(0)
_BCASU(1)
_BRAS(1)
_ROE
_SPARE_CS
_INT6
RIGHT
_TEST
_RESET
_IOWR
_SENSE
-12V
IDE DRIVE
CN16
DIL_44
_RESET
D(15:0)
WARNING:
BYTE SWAPPED
_IOWR
_IORD
_WAIT
_IDE_IRQ
A(23:1)
_IDE_CS(1)
_IDE_CS(2)
_IDE_LED
VCC
XR1
4.7K

Schematic #315987, Rev. C
Sheet 13 of 13

POWER INPU

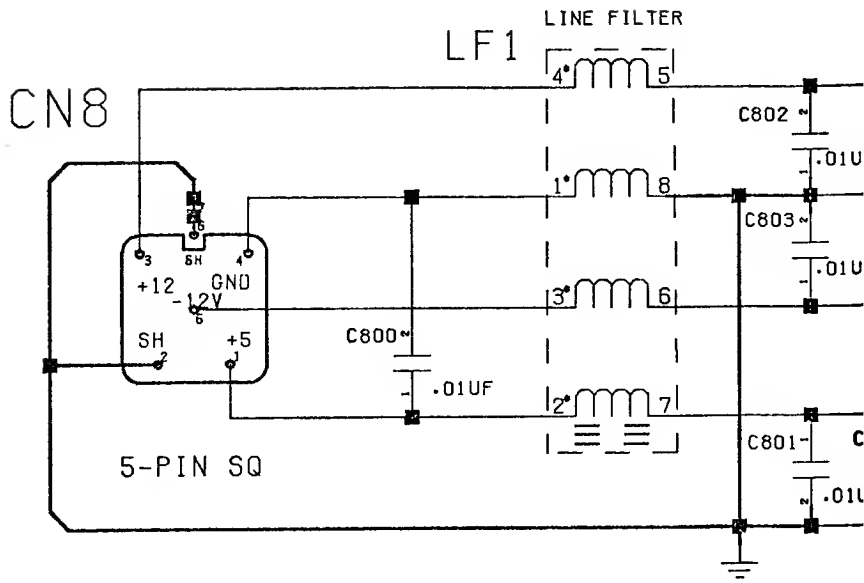

NOTE: HEAVY LINES INDICATE A SINGLE POINT CONNECTION

GROUNDED HOLES

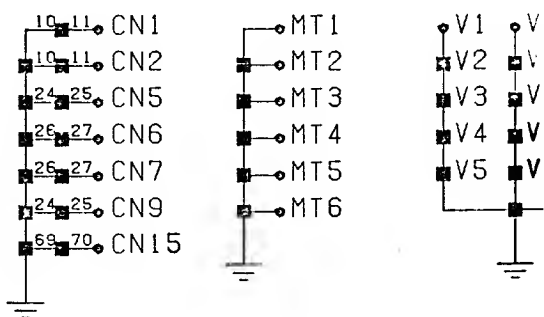

NPUT

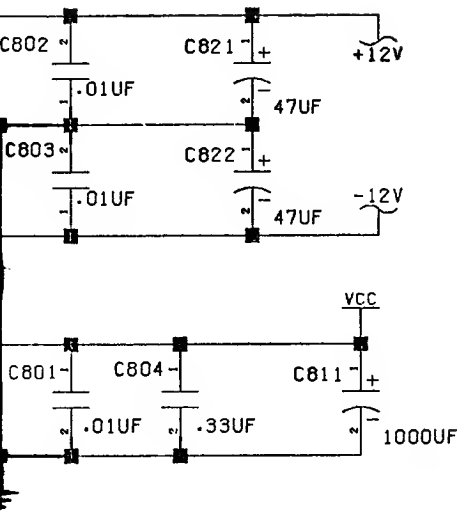

A
ION

"BUS" TERMINATION

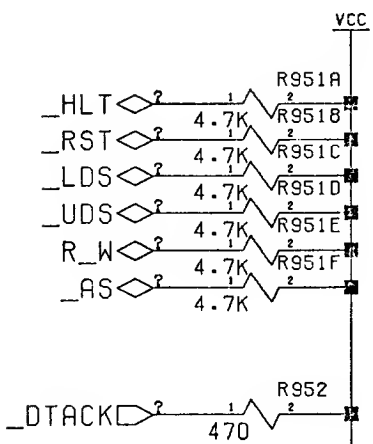

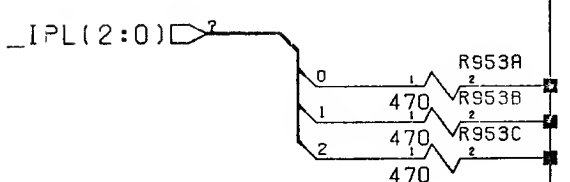

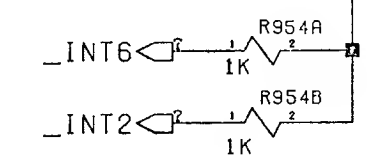

_ES, &C.

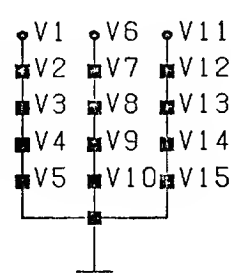

Schematic #315987, Rev. C

Sheet 1 of 13

JUMPERS AND STUFF

REF	TYPE	DESCRIPTION	PAGE
R246	SMT	NTSC COLOR BURST	4
R202	SMT	PAL COLOR BURST	4
R625	SMT	KEYBOARD MPU CLOCK	9
R624	SMT	KEYBOARD/SYSTEM RESET	9

SIGNAL GLOSSARY

SIGNAL	DESCRIPTION (AREA)	PAGES
28MHZ	28.63636 MHZ MASTER CLOCK	
7MHZ	7.15909 MHZ PROCESSOR CLOCK	
A[23:1]	PROCESSOP ADDRESS BUS (68000)	
ACK	DATA ACKNOWLEDGE (PARALLEL PORT)	
AS	ADDRESS STROBE (68000)	
AUDIN	AUDIO INPUT (RS232 PORT)	
AUDOUT	AUDIO OUTPUT (RS232 JACK)	
BEER	BUS ERROR (68000)	
BG	BUS GRANT (68000)	
BGACK	BUS GRANT ACKNOWLEDGE (68000)	
BLISS	BLITTER SLOWDOWN (CHIPS)	
BLIT	CHIP MEMORY ACCESS (CHIPS)	
BR	BUS REQUEST (68000)	
BUSY	DEVICE BUSY (PARALLEL PORT)	
CASL/U	COLUMN ADDRESS STROBE (DRAM)	
CCK/CCKQ	COLOR CLOCK / QUADRATURE (CHIPS)	
CDAC	7.15909 MHZ QUADRATURE CLOCK (CHIPS)	
CHNG	MEDIA CHANGE (FLOPPY)	
CLKRD/WR	READ-TIME CLOCK READ / WRITE (RTC)	
COMP	MONOCHROME COMPOSITE VIDEO (VIDEO)	
CSYNC	COMPOSITE SYNC (VIDEO)	
CTS	CLEAR TO SEND (RS232 PORT)	
D[15:0]	PROCESSOR DATA BUS (68000)	
DIR	STEP DIRECTION (FLOPPY)	
DKRD	DISK READ DATA (FLOPPY)	
DKWD	DISK WRITE DATA (FLOPPY)	
DKWE	DISK WRITE ENABLE (FLOPPY)	
DMAL	CHIP DMA REQUEST LINE (CHIPS)	
DRA[8:0]	DRAM ADDRESS BUS (DRAM)	
DRD[15:0]	DRAM DATA BUS (DRAM)	
DSR	DATA SET READY (RS232 PORT)	
DTACK	DATA TRANSFER ACKNOWLEDGE (68000)	
DTR	DATA TERMINAL READY (RS232 PORT)	
E	PERIPHERAL ENABLE CLOCK (68000)	
EXTICK	EXPANSION PRESENT / RTC TICK	
FC[2:0]	FUNCTION CODE (68000)	
FIRE0/1	FIRE BUTTON 0/1 (JOYSTICKS)	
HLT	PROCESSOR HALT (68000)	
HSYNC	HORIZONTAL SYNC (VIDEO)	
INDEX	INDEX PULSE (FLOPPY)	
INT[2,3,6]	INTERRUPT REQUEST (CHIPS)	
IDRESET	I/O RESET	
IPL[2:0]	INTERRUPT PRIORITY LEVEL (68000)	
KBCLOCK	KEYBOARD CLOCK (KEYBOARD)	
KBDATA	KEYBOARD DATA (KEYBOARD)	
KBRESET	KEYBOARD RESET (KEYBOARD)	
LDS/UDS	UPPER / LOWER DATA STROBES (68000)	
LED	POWER ON LED / AUDIO FILTER DISABLE	
LEFT/RIGHT	LEFT RIGHT AUDIO (AUDIO)	

CONNECTORS

REF	TYPE	DESCRIPTION	PAGE
CN1	DB9P	MOUSE/JOYSTICK 1	5
CN2	DB9P	MOUSE/JOYSTICK 2	5
CN3	RCA-J	RIGHT AUDIO OUTPUT	5
CN4	RCA-J	LEFT AUDIO OUTPUT	5
CN5	DB23S	EXTERNAL FLOPPY	8
CN6	DB25P	RS232 SERIAL PORT	7
CN7	DB25S	PARALLEL PRINTER PORT	7
CN8	SQ 0IN	POWER SUPPLY CONNECTOR	13
CN9	DB23P	VIDEO OUTPUT	6
CN10	RCA-J	COMPOSITE VIDEO	4
CN11	DIL-34	INTERNAL FLOPPY SIGNAL	8
CN12	SIL-4	INTERNAL FLOPPY POWER	8
CN13	MEM-30	KEYBOARD MEMBRANE	9
CN14	SIL-4	INTERNAL FLOPPY POWER	8
CN13	MEM-30	KEYBOARD MEMBRANE	9
CN14	SIL-4	KEYBOARD STATUS LED'S	9
CN15	PCMCIA	PC "MEMORY CARD"	11
P9	EDGE-80	MEMORY BUS EXPANSION	12

SIGNAL	DESCRIPTION (AREA)	PAGES
LPEN	LIGHT PEN TRIGGER (JOYSTICKS)	
MTR	MOTOR ON (FLOPPY)	
MTR0	MOTOR ON - DRIVE 0 (FLOPPY)	
MOV/MOH	MOUSE 0 QUADRATURE V/H (JOYSTICKS)	
MIV/MIH	MOUSE 1 QUADRATURE V/H (JOYSTICKS)	
OVL	OVERLAY ROM OVER RAM	
OVR	OVERRIDE SYSTEM DECODING	
PIXELSW	GENLOCK PIXEL SWITCH (VIDEO)	
POT0X/0Y	POT LINES 0 X/Y (JOYSTICKS)	
POT1X/1Y	POT LINES 1 X/Y (JOYSTICKS)	
POUT	PAPER OUT (PARALLEL PORT)	
PPD[7:0]	PARALLEL PORT DATA (PARALLEL PORT)	
RAMEN	RAM ENABLE (CHIPS)	
REGEN	CHIP REGISTER ENABLE (CHIPS)	
RAS0/1	ROW ADDRESS STROBE (DRAM)	
RDY	DRIVE READY (FLOPPY)	
RESET	GENERAL RESET	
RGA[8:1]	REGISTER ADDRESS BUS (CHIPS)	
R/G/B	RED / GREEN / BLUE (VIDEO)	
RI	RING INDICATE (RS232 PORT)	
ROMEN	ROM ENABLE (ROM)	
RTS	REQUEST TO SEND (RS232 PORT)	
RST	PROCESSOR RESET (68000)	
RXD	RECEIVE DATA (RS232 PORT)	
RW	PROCESSOR READ/WRITE (68000)	
SEL	SELECT (PARALLEL PORT)	
SEL[3:0]	DRIVE SELECT (FLOPPY)	
SIDE	SIDE SELECT (FLOPPY)	
STEP	STEP IN/OUT COMMAND (FLOPPY)	
TRK0	TRACK ZERO SENSE (FLOPPY)	
TXD	TRANSMIT DATA (RS232 PORT)	
VMA	VALID MEMORY ADDRESS (68000)	
VPA	VALID PERIPHERAL ADDRESS (68000)	
VSYNC	VERTICAL SYNC (VIDEO)	
WE	WRITE ENABLE (DRAM)	
WPROT	WRITE PROTECT SENSE (FLOPPY)	
XCLK	EXTERNAL GENLOCK CLOCK (VIDEO)	
XCLKEN	EXTERNAL CLOCK ENABLE (VIDEO)	
XRDY	EXTERNAL DATA READY	
	** CREDIT CARD AND IDE STUFF? **	

KEY COMPONENTS

REF	CHIP	DESCRIPTION	PAGE
U1	68000	68000 PROCESSOR, 8MHZ	2
U2	8375	ECS AGNUS A300/A500+	2
U3	8364	PAULA	5
U4	8373	ECS DENISE	4
U5	4145-20	GAYLE GATE ARRAY	2,8,11
U6	ASST	ROM 256KX16, 200 NS	10
U7-8	8520	AMIGA VIA, 1 MHZ	7
U10-11	28F10	FLASH MEMORY 128KX8	10
U12	CXA1145	SONY VIDEO ENCODER	4
U13	6570-36	AMGIA KEYBOARD MPU	9
U14	NE555	RESET TIMER	9
U16-17	ASST	DRAM 256KX16, 120 NS	3
U15	LF347	BIMOS OP-AMP	5
	TL084	BIMOS OP-AMP	ALT
U28	1488	EIA LINE DRIVER	7
U29	1489	EIA LINE RECEIVER	7
X1	OSC	TTL 28.63636 MHZ NTSC	2
	OSC	TTL 28.37512 MHZ PAL	ALT
Y451	XTAL	4.43619MHZ PAL BURST	4
Y621	XTAL	3MHZ CERAMIC RESONATOR	9
X2	ASST	PAL VIDEO MODULATOR	4
	ASST	NTSC VIDEO MODULATOR	4

Schematic #315987, Rev. C
Sheet 2 of 13

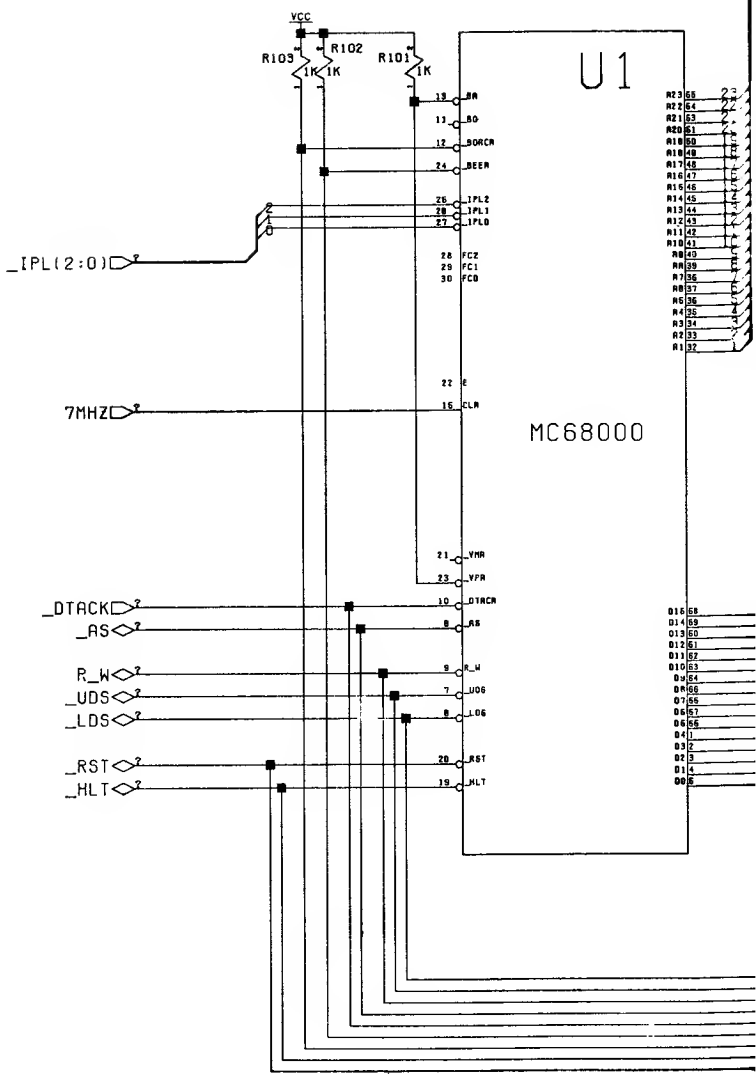

JUNE BUG
10/22/91

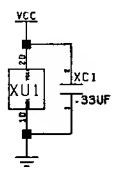

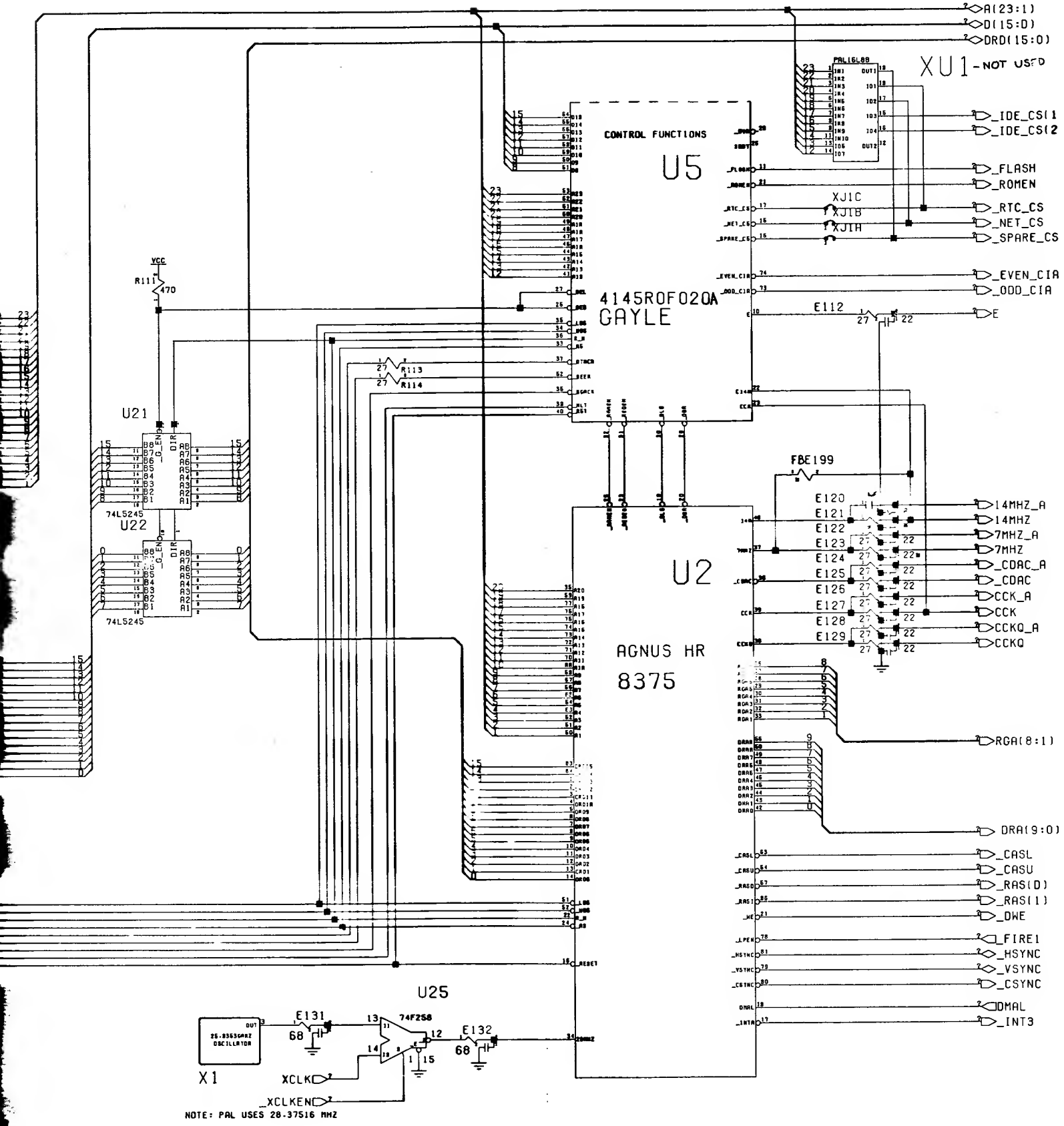
A(23:1)
D(15:0)
DRD(15:0)
XU1 - NOT USED
PAL16L8B
_IDE_CS(1
_IDE_CS(2
CONTROL FUNCTIONS
U5
_FLASH
_ROMEN
XJ1C
XJ1B
XJ1H
_RTC_CS
_NET_CS
_SPARE_CS
_EVEN_CIA
_ODD_CIA
E112
E
4145ROF020A
GAYLE
R111
470
VCC
R113
R114
27
U21
U22
74LS245
FBE199
E120
E121
E122
E123
E124
E125
E126
E127
E128
E129
14MHZ_A
14MHZ
7MHZ_A
7MHZ
_CDAC_A
_CDAC
CCK_A
CCK
CCKQ_A
CCKQ
U2
AGNUS HR
8375
RGA(8:1)
DRA(9:0)
_CASL
_CASU
_RAS(0)
_RAS(1)
_DWE
_FIRE1
_HSYNC
_VSYNC
_CSYNC
DMAL
_INT3
RESET
U25
74F258
E131
E132
68
X1
25.0363MHZ
OSCILLATOR
XCLK
_XCLKEN
NOTE: PAL USES 28.37516 MHZ

Schematic #315987, Rev. C
Sheet 3 of 13

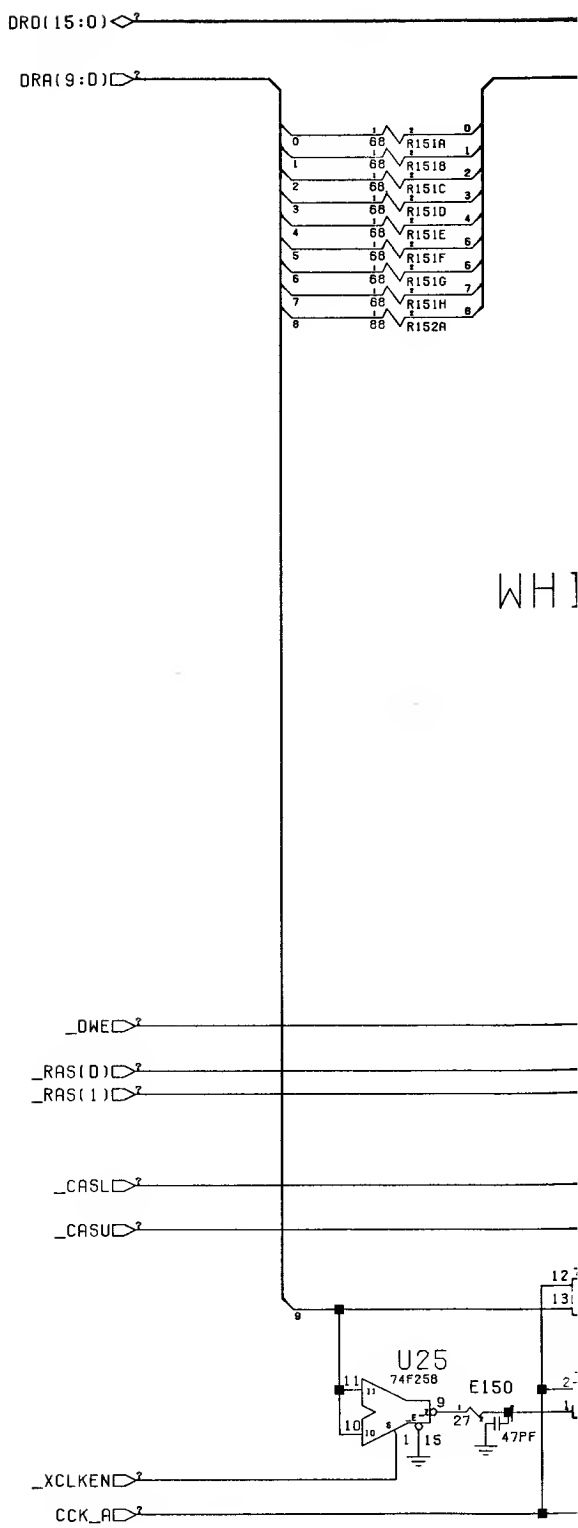

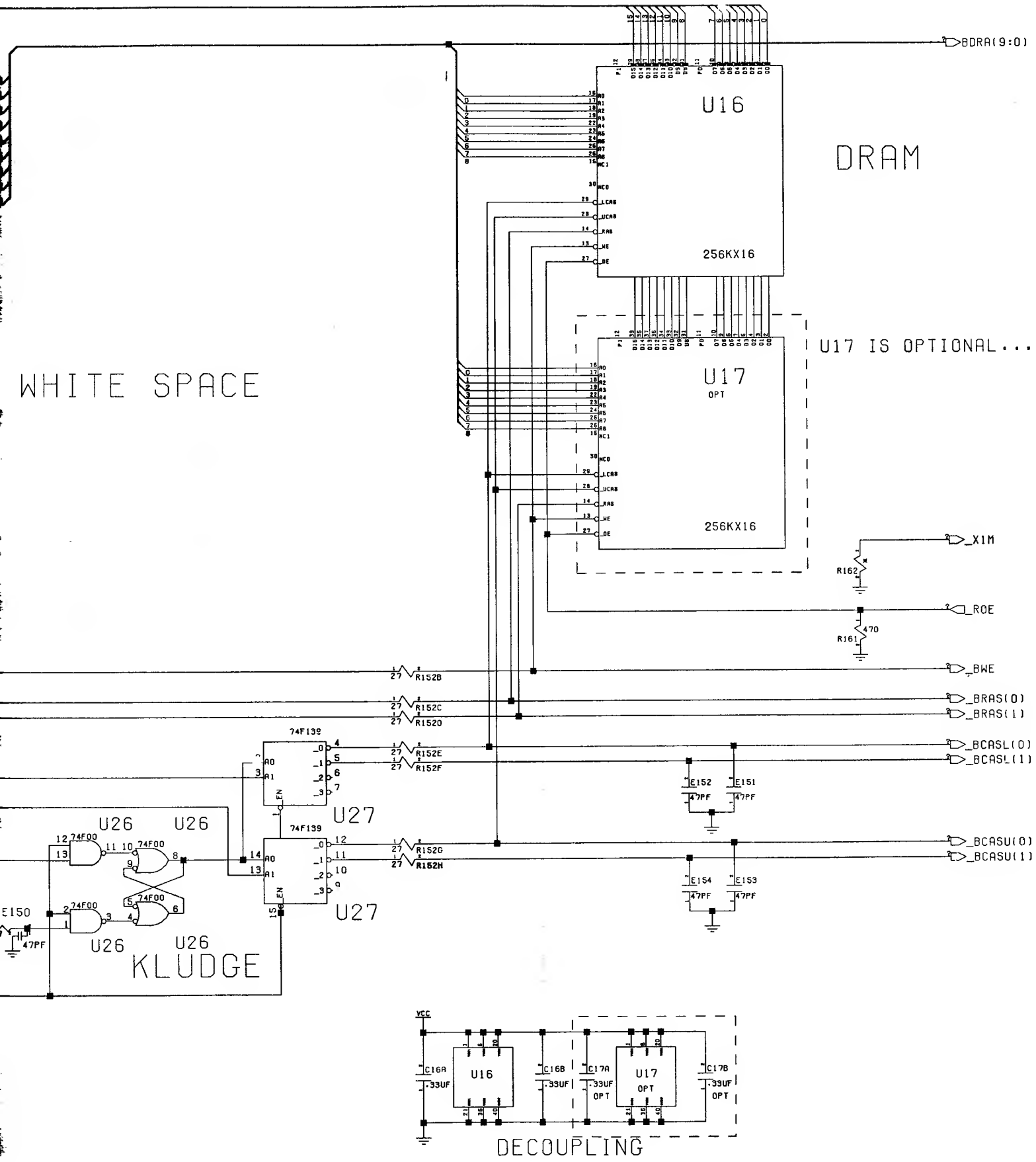
BDRA(9:0)
U16
DRAM
256KX16
U17 IS OPTIONAL...
U17
OPT
256KX16
WHITE SPACE
_X1M
R162
_ROE
R161
470
_BWE
R152B
_BRAS(0)
R152C
_BRAS(1)
R152D
74F139
_BCASL(0)
R152E
_BCASL(1)
R152F
E152
E151
47PF
U27
U26
74F00
74F139
_BCASU(0)
R152G
_BCASU(1)
R152H
E154
E153
E150
U26
KLUDGE
VCC
C16A
.33UF
C16B
C17A
C17B
DECOUPLING

Schematic #315987, Rev. C

Sheet 4 of 13

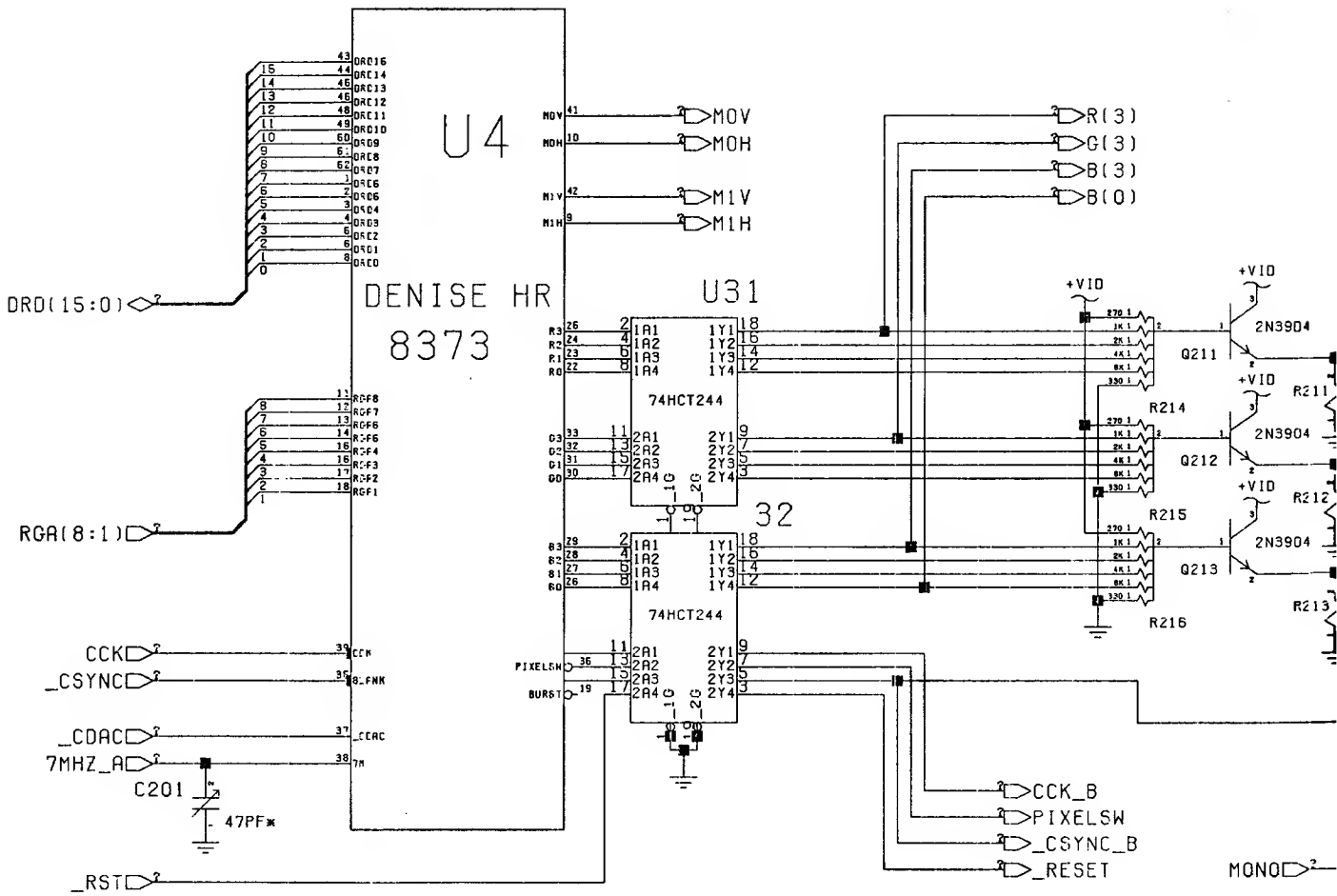

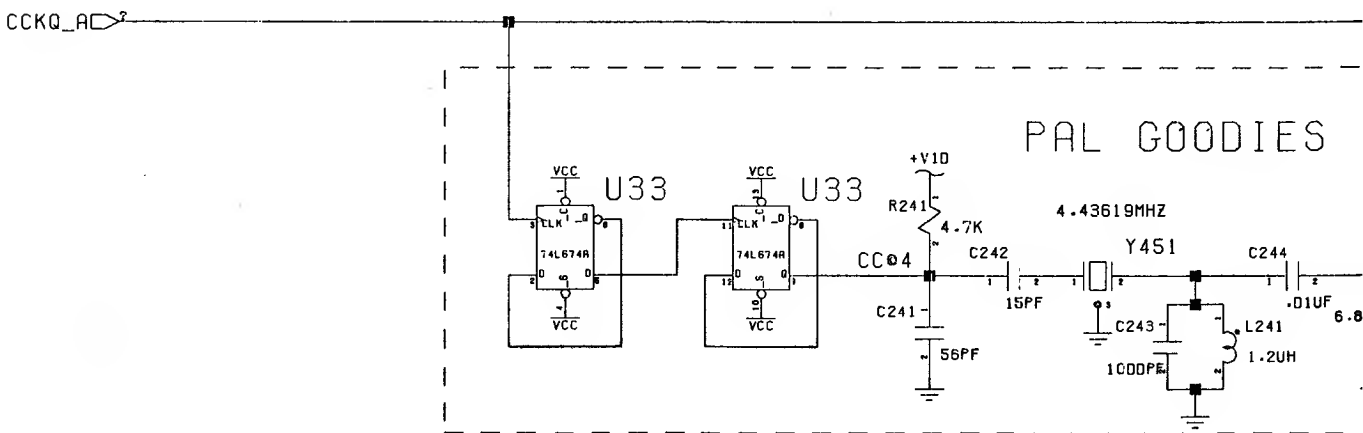

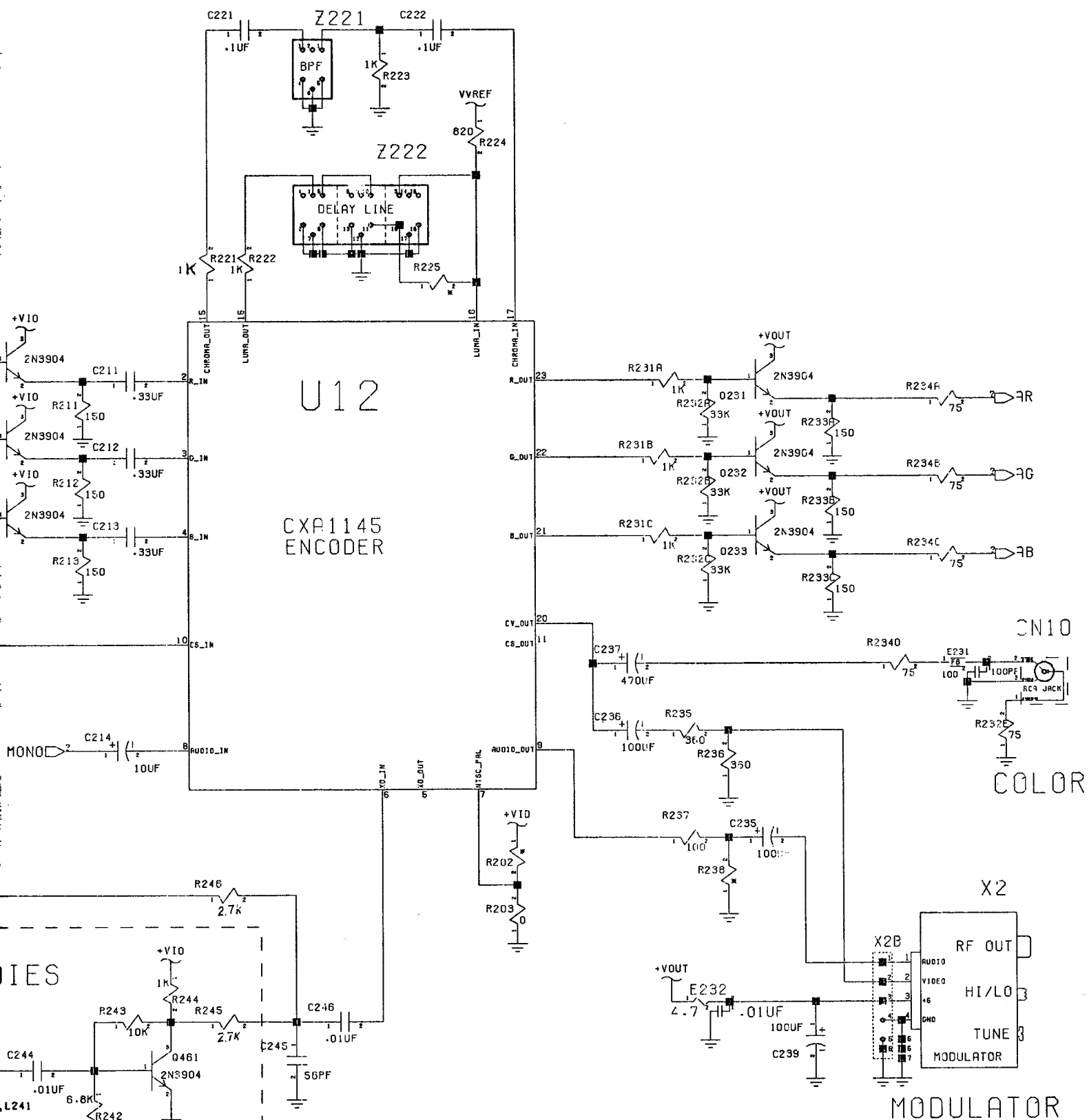
Z221
BPF
Z222
DELAY LINE
U12
CXA1145
ENCODER
CN10
COLOR
X2
RF OUT
HI/LO
TUNE
MODULATOR
MODULATOR
MONO
IES

Schematic #315987, Rev. C
Sheet 5 of 13

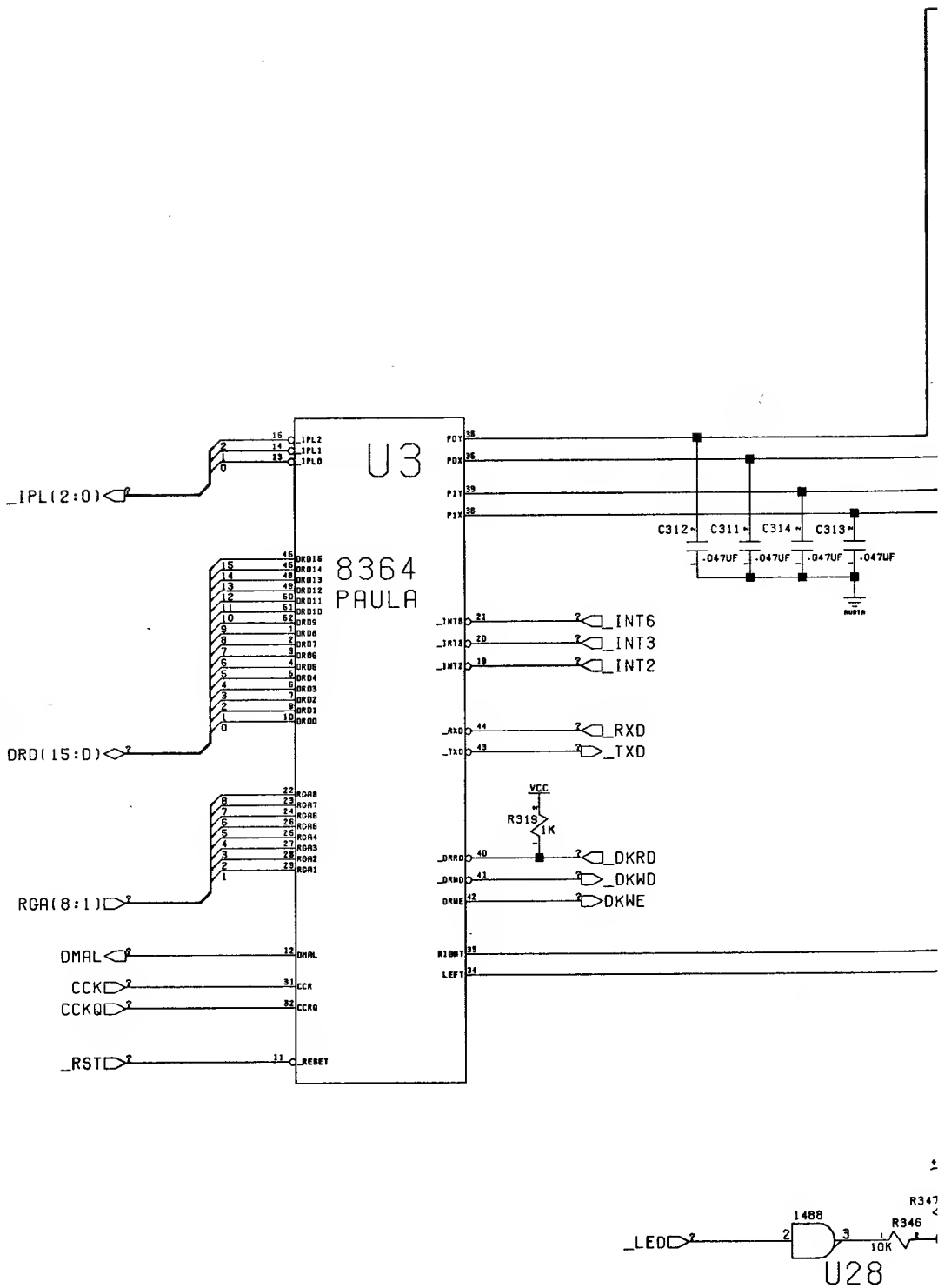

NOTE: LED OFF, FILTERS

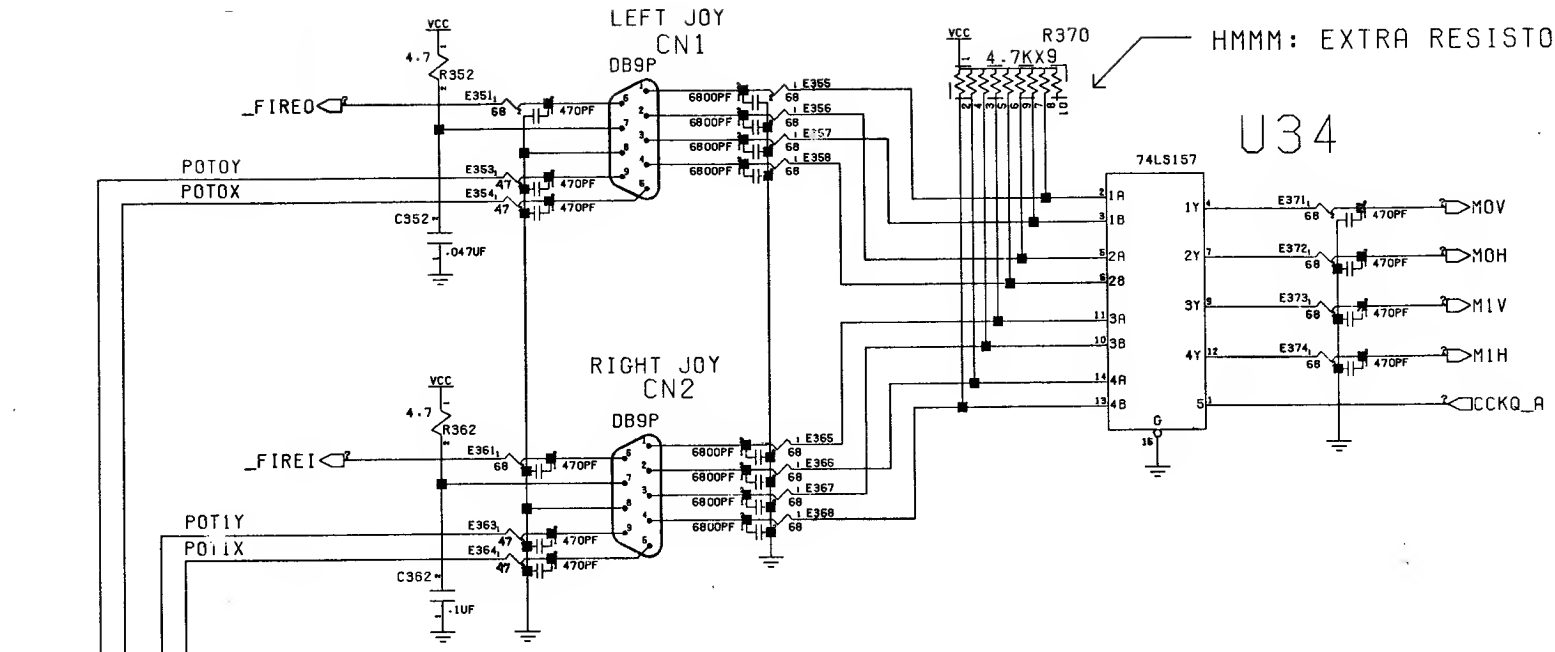

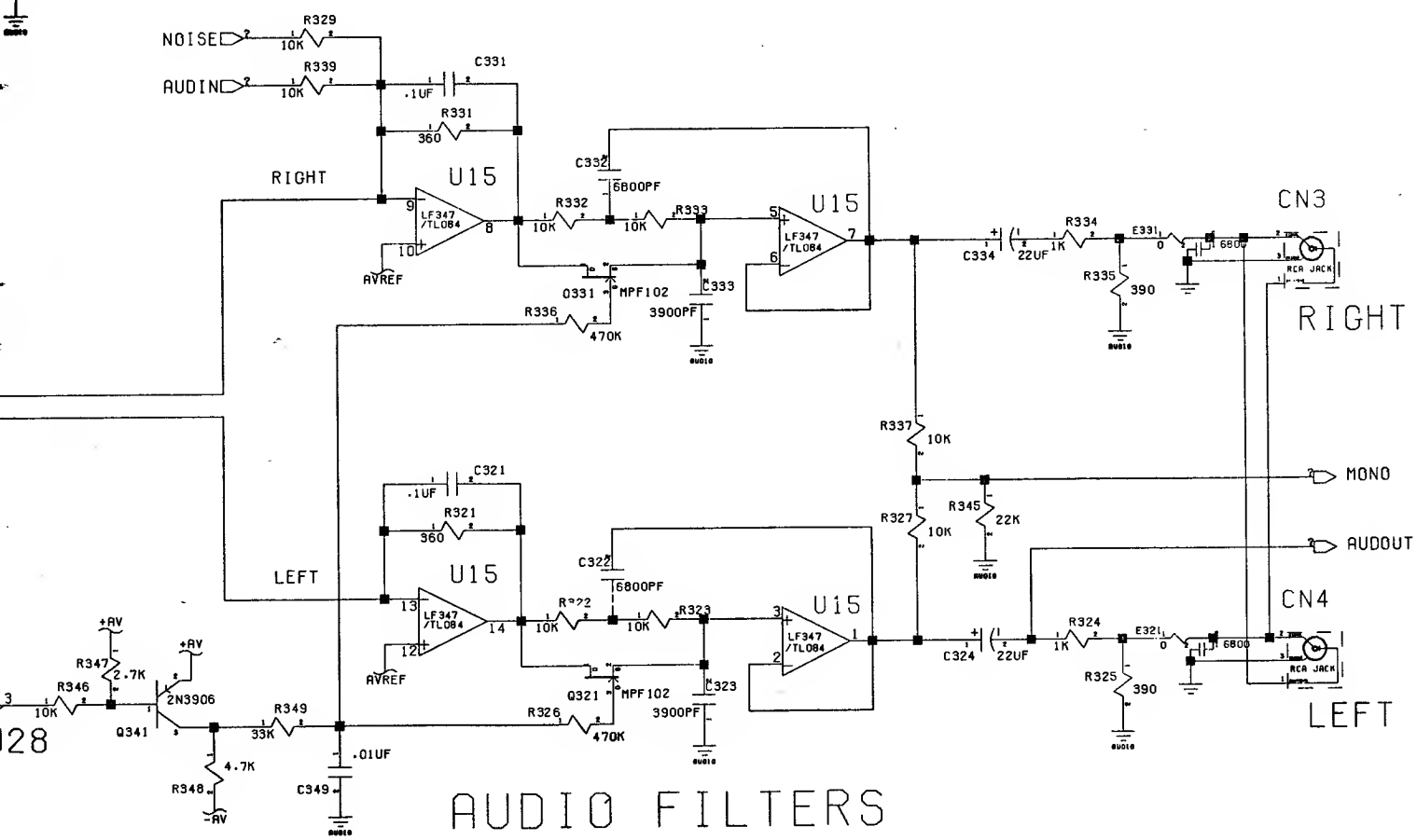

F, FILTERS BYPASSED

Schematic #315987, Rev. C
Sheet 6 of 13

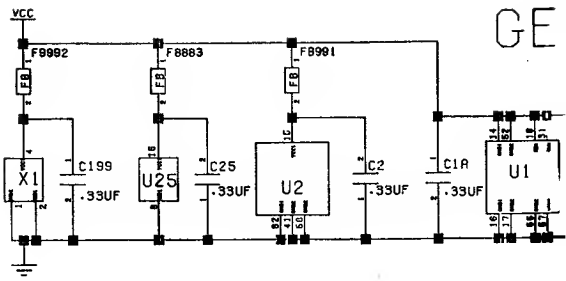

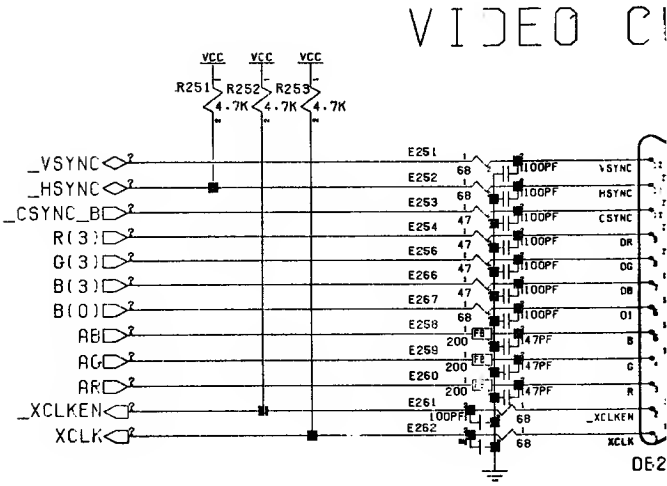

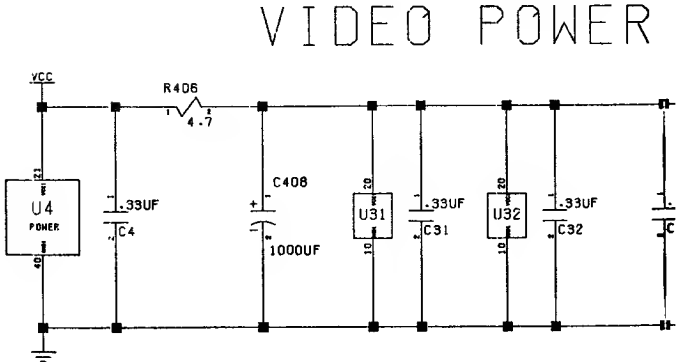

GENERAL DECOUPLING

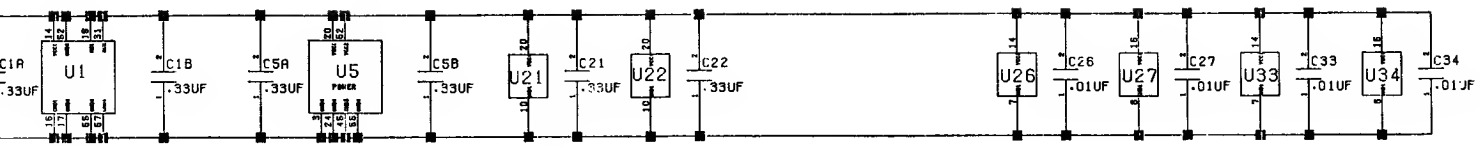

O OUT

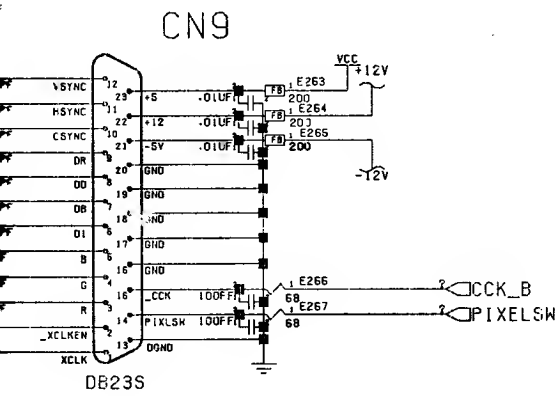

AUDIO POWER

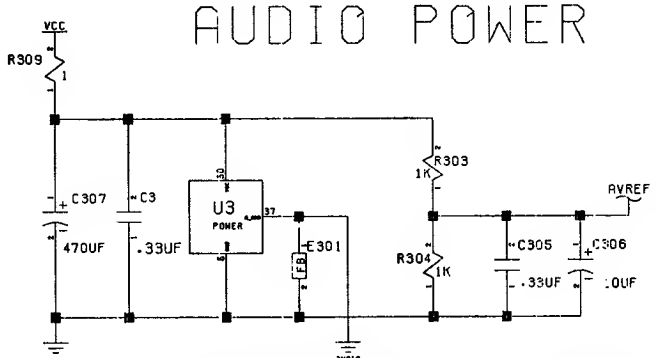

NOTE: GROUND INTERCONNECTION NEAR AUDIO JACKS.

WER

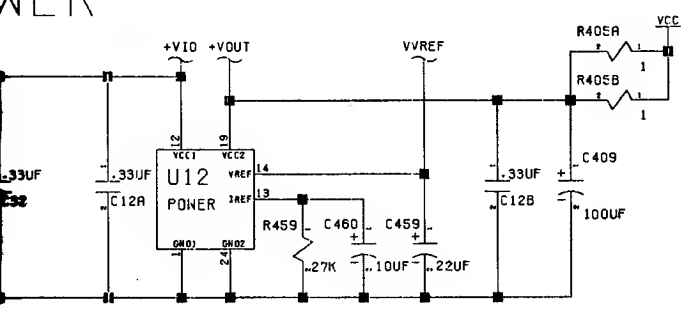

DECOUPLING

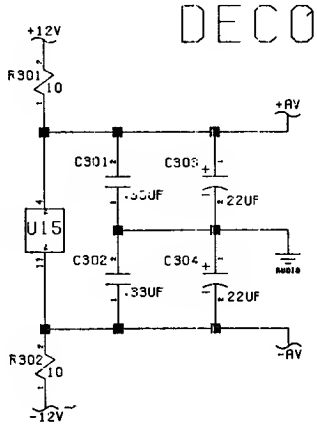

Schematic #315987, Rev. C

Sheet 7 of 13

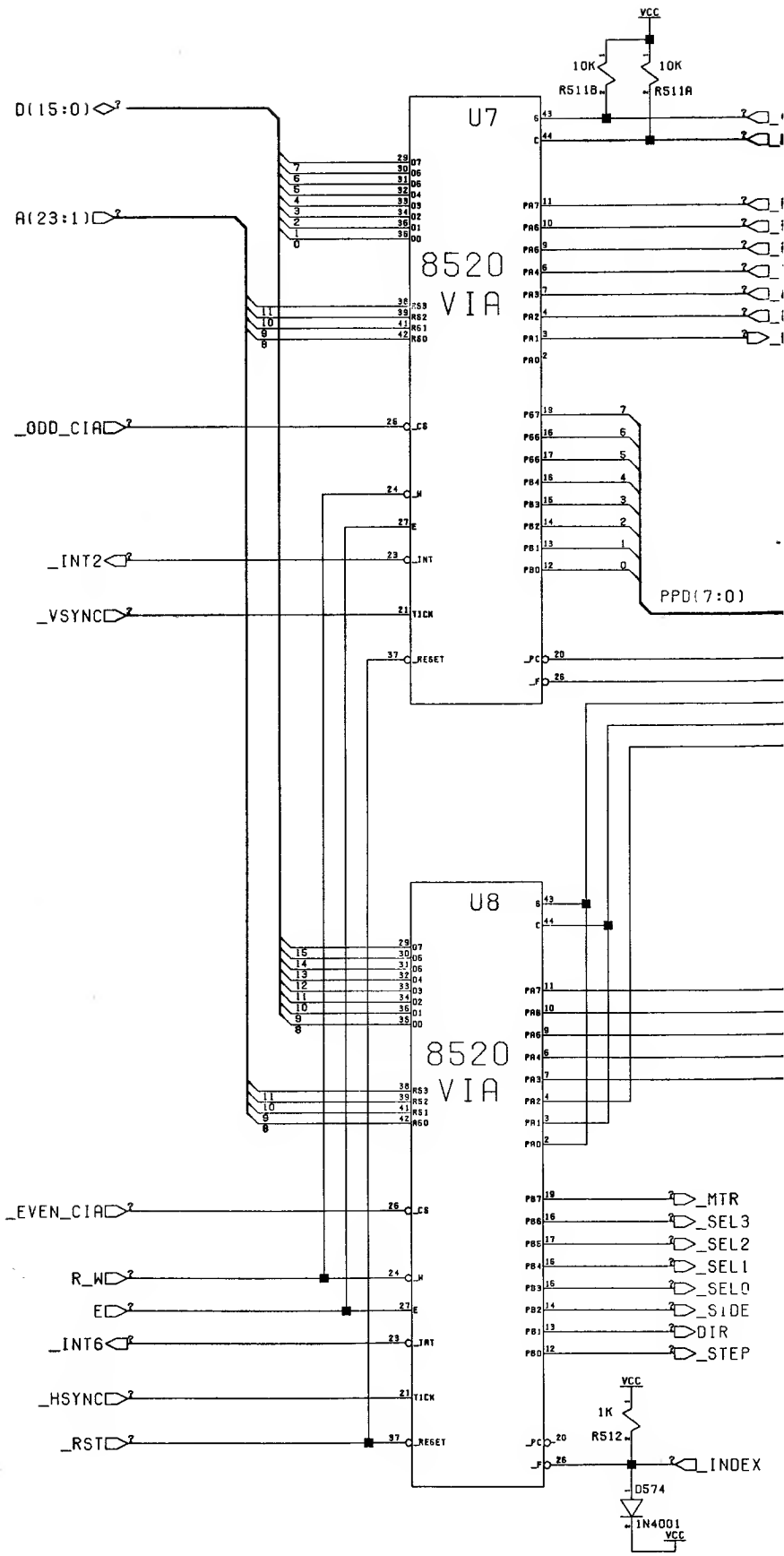

LOGIC TABLE PAR PORT
1 – 14 H
15 –
16 – H
17 – 25 L

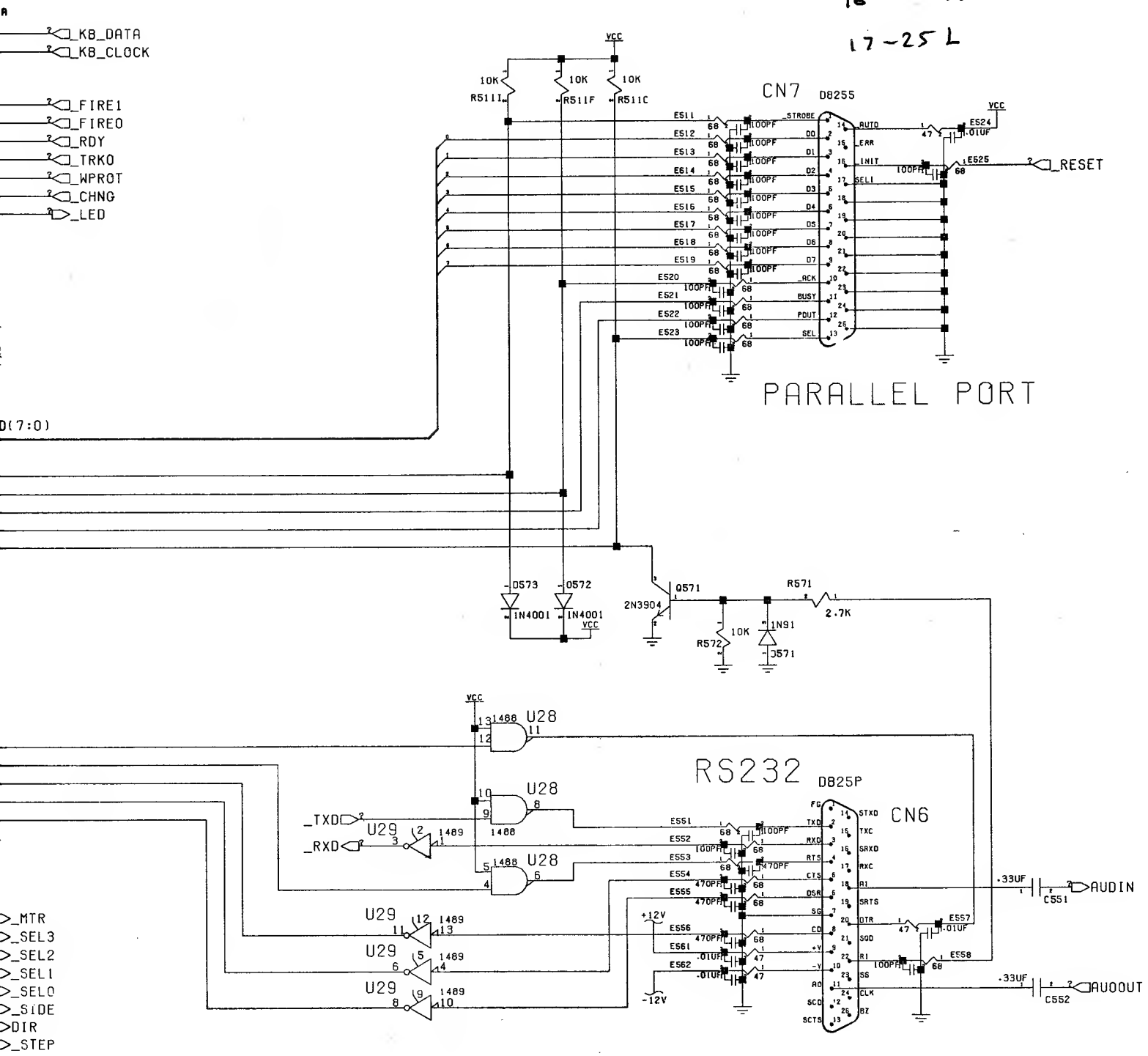

Schematic #315987, Rev. C
Sheet 8 of 13

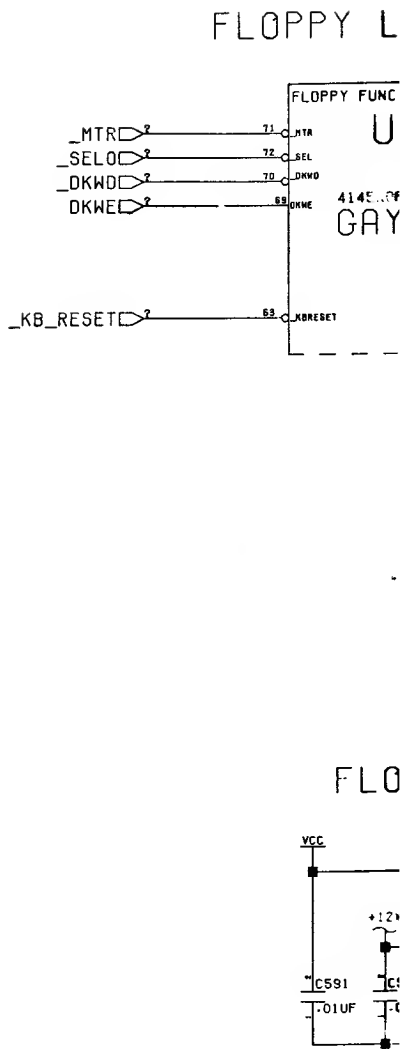

PPY LOGIC

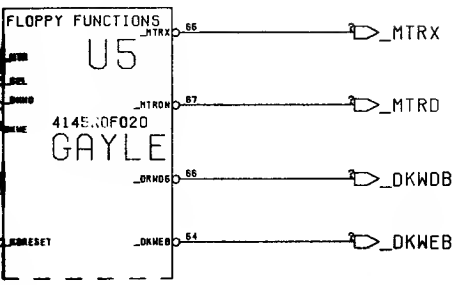

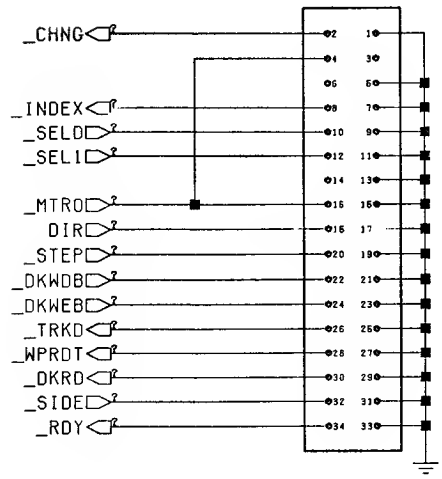

INTERNAL FLOPPY CN11

FLOPPY POWER

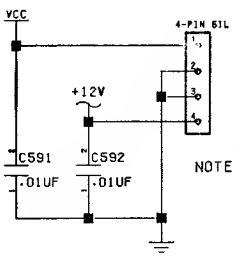

CN12

NOTE: SOME DRIVES ARE +5 ONLY...

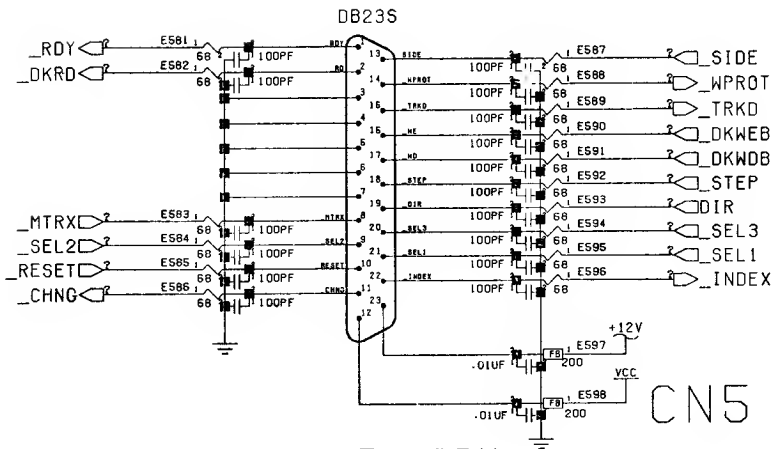

EXTERNAL FLOPPY

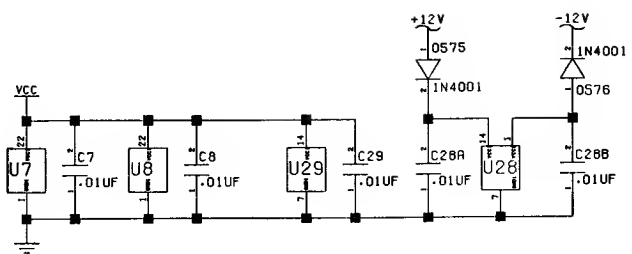

Schematic #315987, Rev. C
Sheet 9 of 13

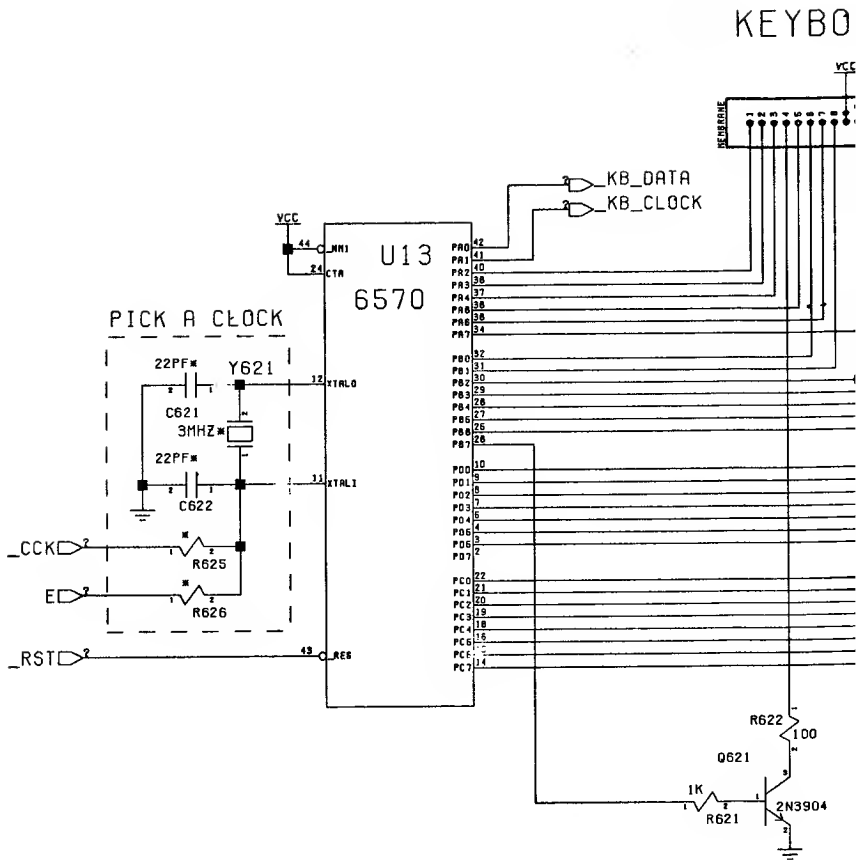

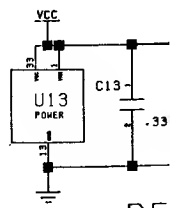

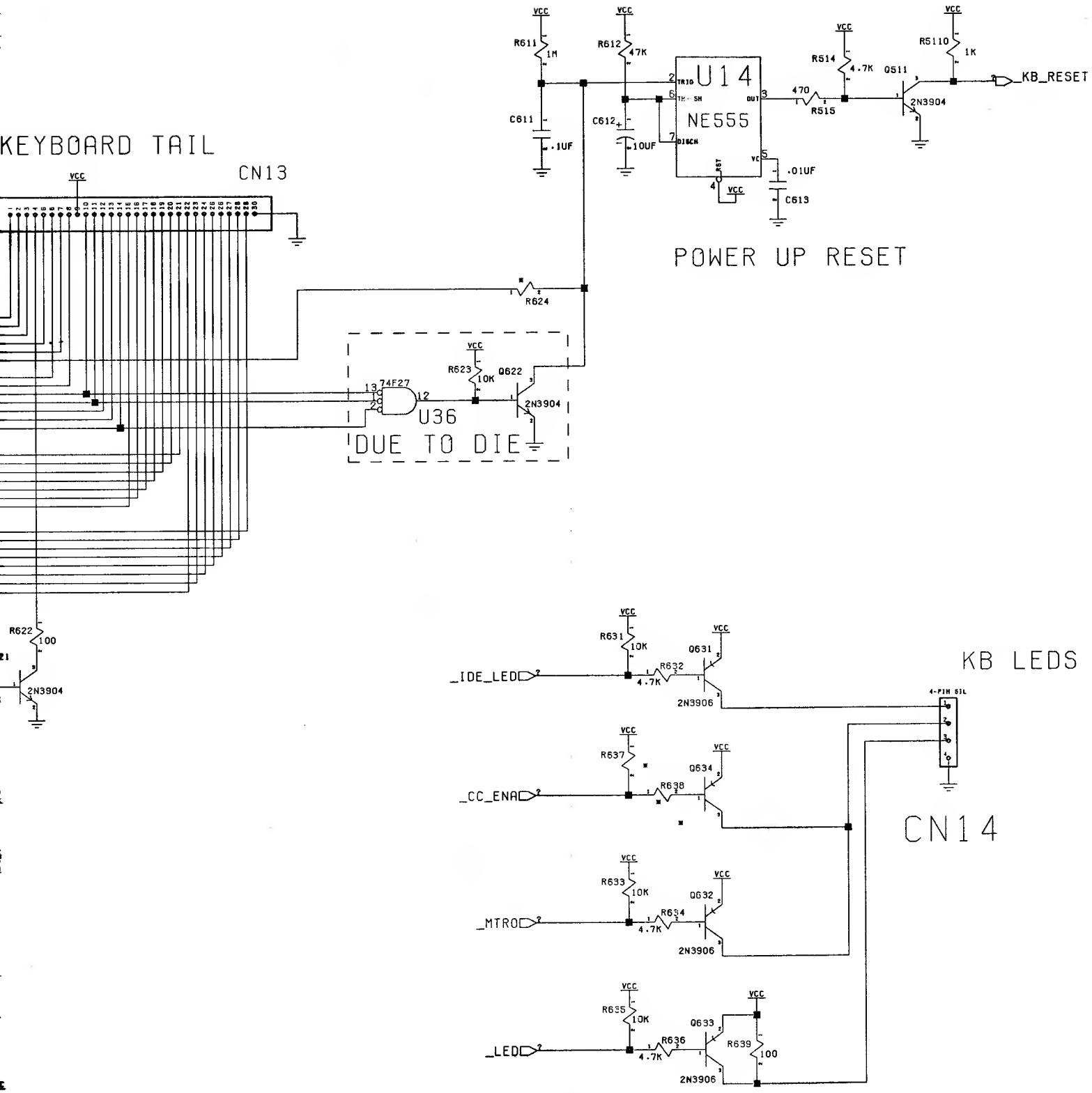
KEYBOARD TAIL
CN13
VCC
R611
1M
R612
47K
C611
.1UF
C612
10UF
U14
NE555
TRIG
THRSH
OUT
DISCH
RST
VC
.01UF
C613
R514
4.7K
Q511
R5110
1K
470
R515
2N3904
KB_RESET
POWER UP RESET
R624
R623
10K
Q622
74F27
U36
DUE TO DIE
R622
100
2N3904
KB LEDS
_IDE_LED
R631
10K
R632
4.7K
Q631
2N3906
4-PIN SIL
_CC_ENA
R637
R638
Q634
_MTRO
R633
R634
Q632
_LED
R635
R636
Q633
R639
CN14
C13
.33UF
C14
C36
.01UF
DECOUPLING